COMPONENTS OF HYDRAULIC AND PNEUMATIC SYSTEM

PRASHANT AMBADEKAR

ADVANTAGES OF PNEUMATIC SYSTEMS

High effectiveness

- Unlimited supply of air to produce compressed air.
- Not restricted by distance, as it can easily be transported through pipes.
- Compressed air can be released directly into the atmosphere without the need of processing.

High durability and reliability

- Pneumatic components are extremely durable and can not be damaged easily.

Simple design

- Designs of pneumatic components are relatively simple.
- More suitable for use in automatic control systems.

ADVANTAGES OF PNEUMATIC SYSTEMS

High adaptability to harsh environment

- Comparatively compressed air is less affected by high temperature, dust, corrosion, etc.

Safety

- Safer because they can work in inflammable environment without causing fire or explosion.
- Pneumatic components do not burn or get overheated when overloaded.

Easy selection of speed and pressure

- Speeds of rectilinear and oscillating movement of pneumatic systems are easy to adjust.
- Pressure and volume of air can easily be adjusted.

ADVANTAGES OF PNEUMATIC SYSTEMS

Environmental friendly

- The operation of pneumatic systems do not produce pollutants.
- Pneumatic systems can work in environments that demand high level of cleanliness.

Economical

- As pneumatic components are not expensive, the costs of pneumatic systems are quite low.
- Pneumatic systems are very durable, the cost of repair is significantly lower than that of other systems.

LIMITATIONS OF PNEUMATIC SYSTEMS

Relatively low accuracy

- As the volume of air may change when compressed or heated, the supply of air to the system may not be accurate, causing a decrease in the overall accuracy of the system.

Low loading

- As the cylinders are not very large, a pneumatic system cannot drive loads that are too heavy.

Processing required before use

- Compressed air must be processed before use.
- Moving parts may wear out quickly due to friction.

LIMITATIONS OF PNEUMATIC SYSTEMS

Uneven moving speed

- As air can easily be compressed, the moving speeds of the pistons are relatively uneven.

Noise

- Noise will be produced when compressed air is released from the pneumatic components.

Advantages and distinguishing characteristics of compressed air:

Availability	Air is available practically everywhere in unlimited quantities.
Transport	Air can be easily transported in pipelines, even over large distances.
Storage	Compressed air can be stored in a reservoir and removed as required. In addition, the reservoir can be transportable.
Temperature	Compressed air is relatively insensitive to temperature fluctuations. This ensures reliable operation, even under extreme conditions.
Explosion proof	Compressed air offers no risk of explosion or fire.
Cleanliness	Unlubricated exhaust air is clean. Any unlubricated air which escapes through leaking pipes or components does not cause contamination.
Components	The operating components are of simple construction and therefore relatively inexpensive.
Speed	Compressed air is a very fast working medium. This enables high working speeds to be attained.
Overload safe	Pneumatic tools and operating components can be loaded to the point of stopping and are therefore overload safe.

Preparation	Compressed air requires good preparation. Dirt and condensate should not be present.
Compression	It is not always possible to achieve uniform and constant piston speeds with compressed air.
Force requirement	Compressed air is economical only up to a certain force requirement. Under the normal working pressure of 600 to 700 kPa (6 to 7 bar) and dependent on the travel and speed, the output limit is between 40 000 and 50 000 Newtons.
Noise level	The exhaust air is loud. This problem has now, however been largely solved due to the development of sound absorption material and silencers.

ADVANTAGES OF PNEUMATIC SYSTEMS

- It uses incompressible fluid which results in higher efficiency.
- It delivers consistent power output which is difficult in pneumatic or mechanical drive systems.
- Hydraulic systems employ high density incompressible fluid.
- Possibility of leakage is less in hydraulic system as compared to that in pneumatic system.
- The maintenance cost is less.
- These systems perform well in hot environment conditions.

ADVANTAGES OF PNEUMATIC SYSTEMS

- Material of storage tank, piping, cylinder and piston can be corroded with the hydraulic fluid.
- Weight and size of the system is more which makes it unsuitable for the smaller instruments.
- Small impurities in the hydraulic fluid can permanently damage the complete system.
- Leakage of hydraulic fluid is a critical issue and suitable prevention method and seals must be adopted.
- Hydraulic fluids, if not disposed properly, can be harmful to the environment.

COMPARISON BETWEEN SYSTEMS

S. No.	Hydraulic System	Pneumatic System
1.	It employs a pressurized liquid as a fluid	It employs a compressed gas, usually air, as a fluid
2.	An oil hydraulic system operates at pressures up to 700 bar	A pneumatic system usually operates at 5–10 bar
3.	Generally designed as closed system	Usually designed as open system
4.	The system slows down when leakage occurs	Leakage does not affect the system much
5.	Valve operations are difficult	Valve operations are easy
6.	Heavier in weight	Lighter in weight
7.	Pumps are used to provide pressurized liquids	Compressors are used to provide compressed gases
8.	The system is unsafe to fire hazards	The system is free from fire hazards
9.	Automatic lubrication is provided	Special arrangements for lubrication are needed

BASIC COMPONENTS OF A HYDRAULIC SYSTEM

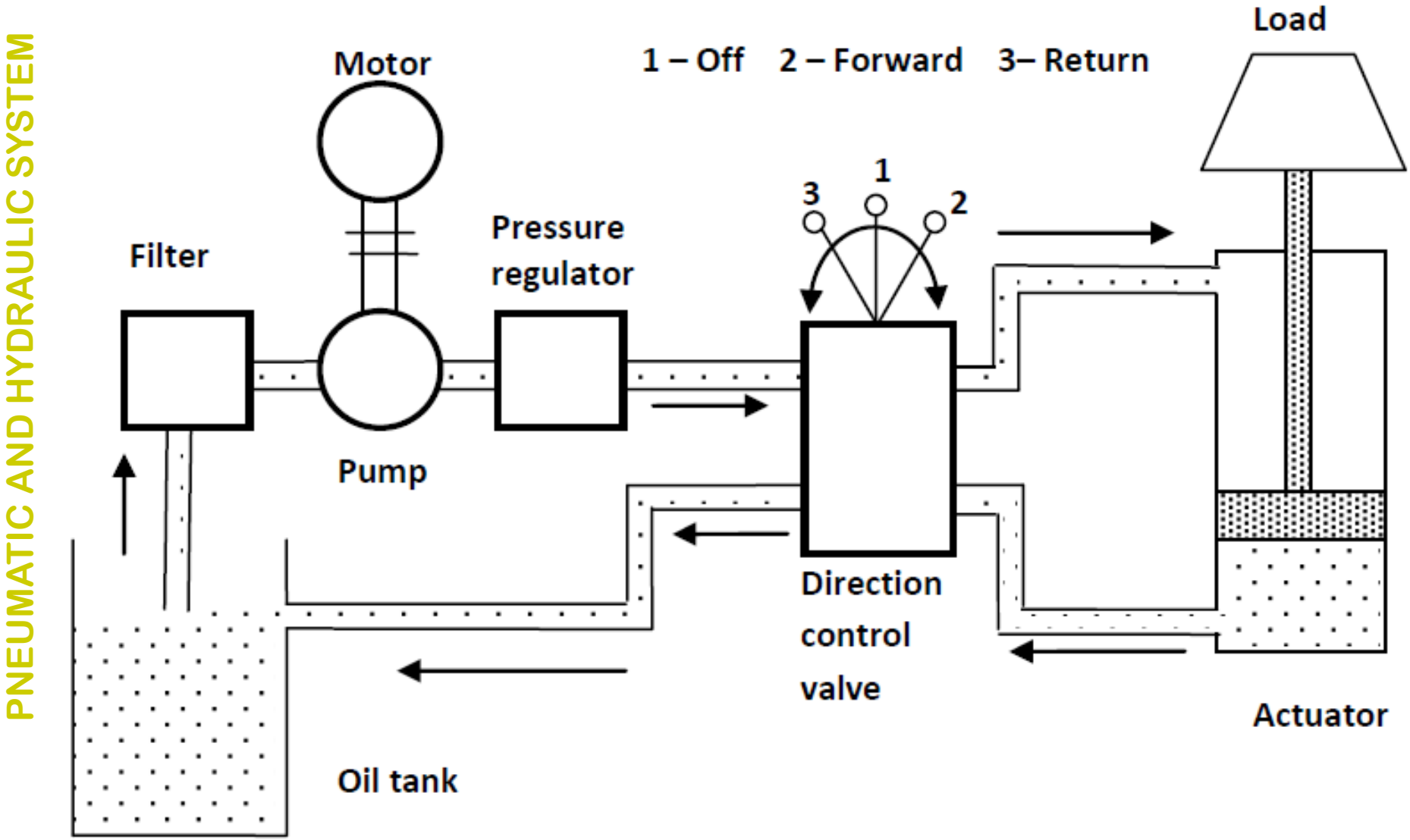

Components of a hydraulic system

BASIC COMPONENTS OF A HYDRAULIC SYSTEM

Functions of the components are as follows:

1. The hydraulic actuator is a device used to convert fluid power into mechanical power to do useful work.

   The actuator may be of the linear type (cylinder) or rotary type (motor) to provide linear or rotary motion.

2. The hydraulic pump is used to force the fluid from the reservoir to rest of the hydraulic circuit by converting mechanical energy into hydraulic energy.

3. Valves are used to control the direction, pressure and flow rate of a fluid flowing through the circuit.

4. External power supply (motor) is required to drive the pump.

BASIC COMPONENTS OF A HYDRAULIC SYSTEM

5. Reservoir is used to hold the hydraulic oil.

6. Piping system carries the hydraulic oil from one place to another.

7. Filters are used to remove any foreign particles so as keep the fluid system clean and efficient, as well as avoid damage to the actuator and valves.

8. Pressure regulator regulates the required level of pressure in the hydraulic fluid.

BASIC COMPONENTS OF A HYDRAULIC SYSTEM

Cylinder movement is controlled by a three-position change over a control valve.

1. When piston of valve is changed to position 3, pressure line is connected to port A and thus load is raised.

2. When position of valve is changed to position 2, pressure line is connected to port B and thus load is lowered.

3. When the valve is at center position 1, it locks the fluid into the cylinder(thereby holding it in position) and causing all the pump output fluid to return to tank via pressure relief.

BASIC COMPONENTS OF A HYDRAULIC SYSTEM

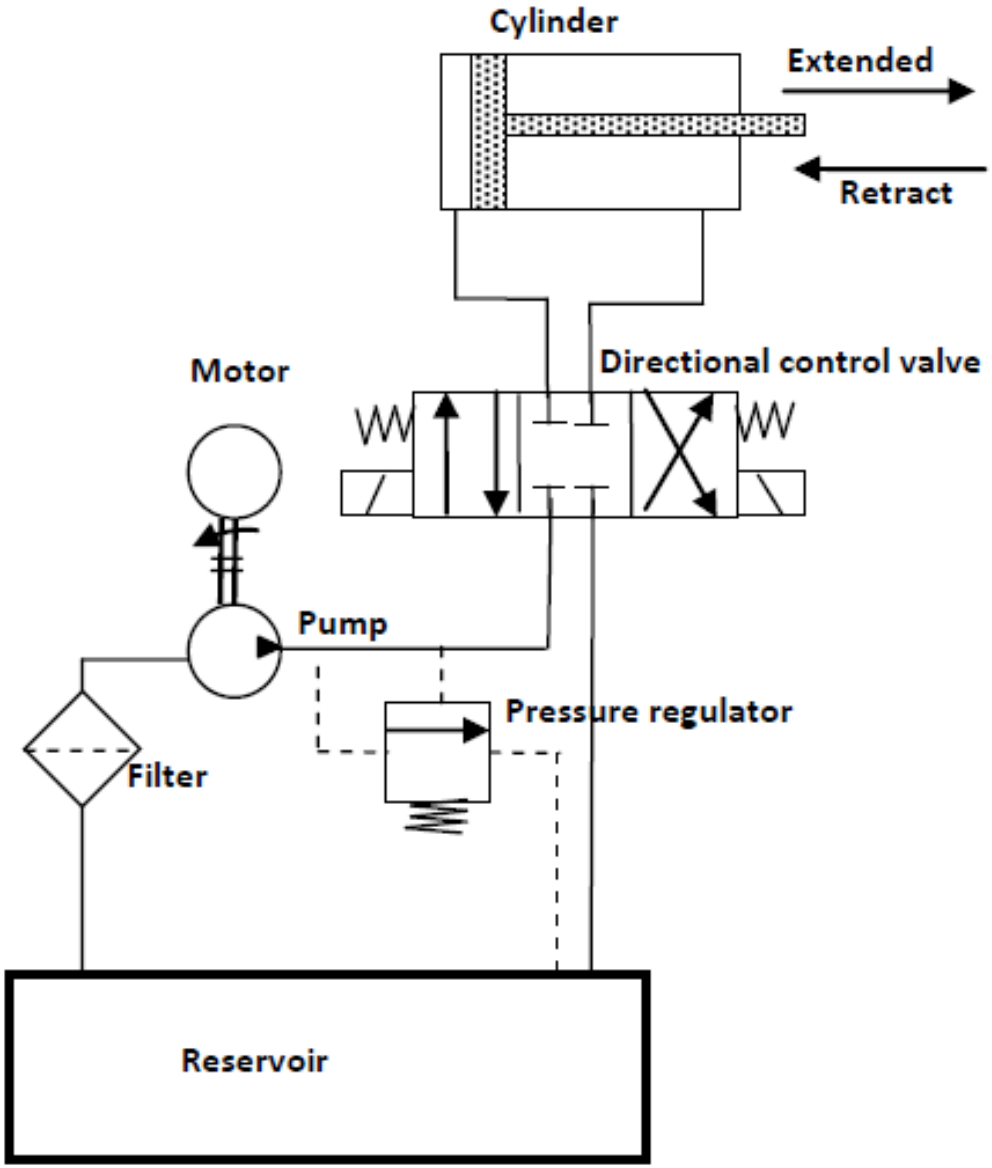

Components of a hydraulic system (shown using symbols).

Basic Components of Pneumatic System

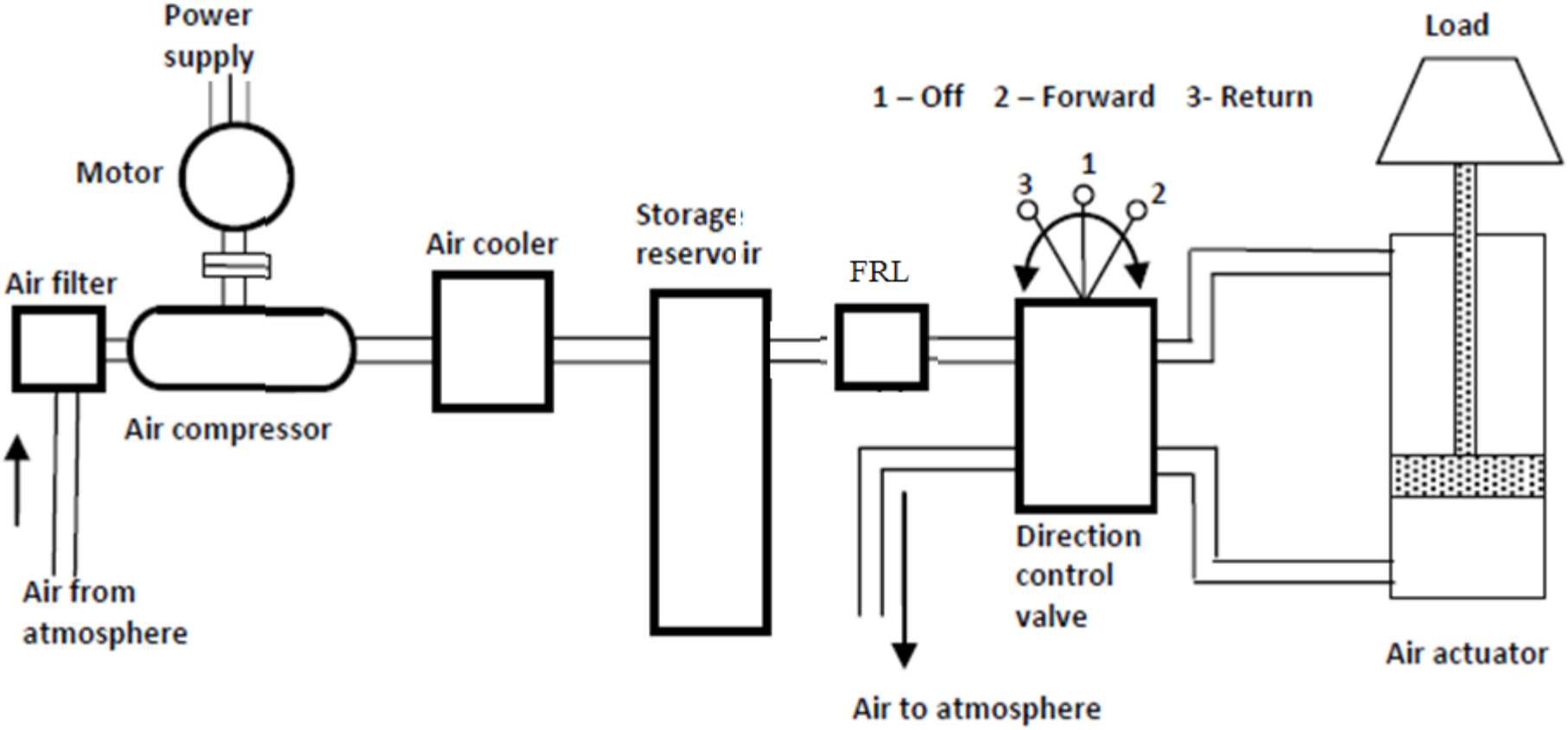

Components of a pneumatic system.

Basic Components of Pneumatic System

Air filters: These are used to filter out the contaminants from the air.

Compressor: Compressed air is generated by using air compressors.

Air cooler: During compression operation, air temperature increases. Therefore coolers are used to reduce the temperature of the compressed air.

Basic Components of Pneumatic System

Control Valves: Control valves are used to regulate, control and monitor for control of direction flow, pressure etc.

Air Actuator: Cylinders and motors are used to obtain the required movements of mechanical elements of pneumatic system.

Electric Motor: Transforms electrical energy into mechanical energy. It is used to drive the compressor.

Receiver tank*:* The compressed air coming from the compressor is stored in the air receiver.

Basic Components of Pneumatic System

The functions of various components shown in Fig. are as follows:

1. The pneumatic actuator converts the fluid power into mechanical power to perform useful work.

2. The compressor is used to compress the fresh air drawn from the atmosphere.

3. The storage reservoir is used to store a given volume of compressed air.

4. The valves are used to control the direction, flow rate and pressure of compressed air.

Basic Components of Pneumatic System

5. External power supply (motor) is used to drive the compressor.

6. The piping system carries the pressurized air from one location to another.

Basic Components of Pneumatic System

Compressed air filter

- It removes all contaminants from the compressed air flowing through it as well as water which has already condensed.
- Compressed air enters the filter bowl through guide slots.
- Liquid particles are separated centrifugally collecting in the lower part of the filter bowl.
- Collected condensate must be drained regularly otherwise it will mix with the air stream.

Basic Components of Pneumatic System

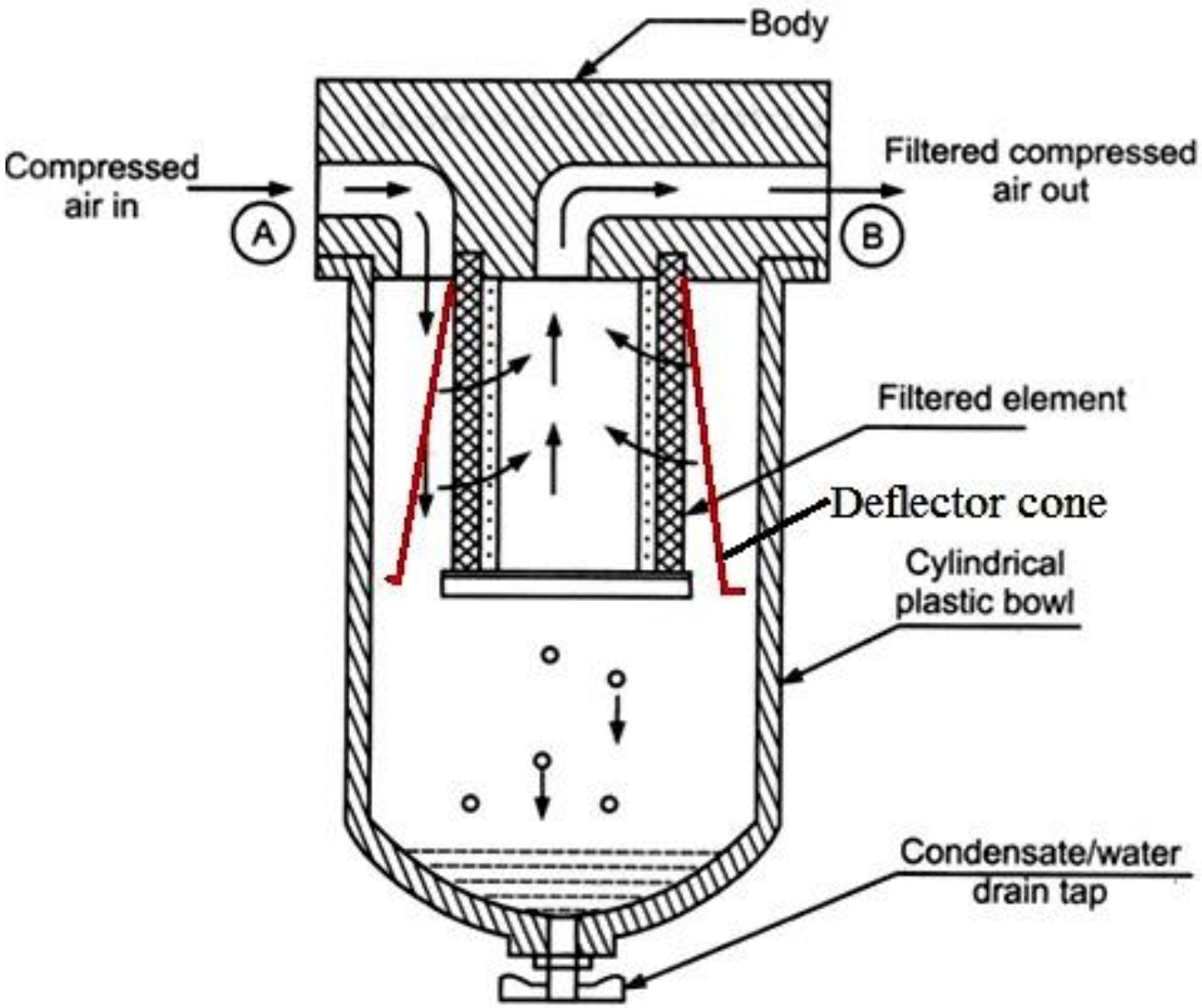

AIR FILTER

Basic Components of Pneumatic System

Compressed air regulator

- The purpose of the regulator is to keep the operating pressure of the system virtually constant regardless of fluctuations in the line pressure and the air consumption.
- High pressure of incoming air is to be reduced.

Basic Components of Pneumatic System

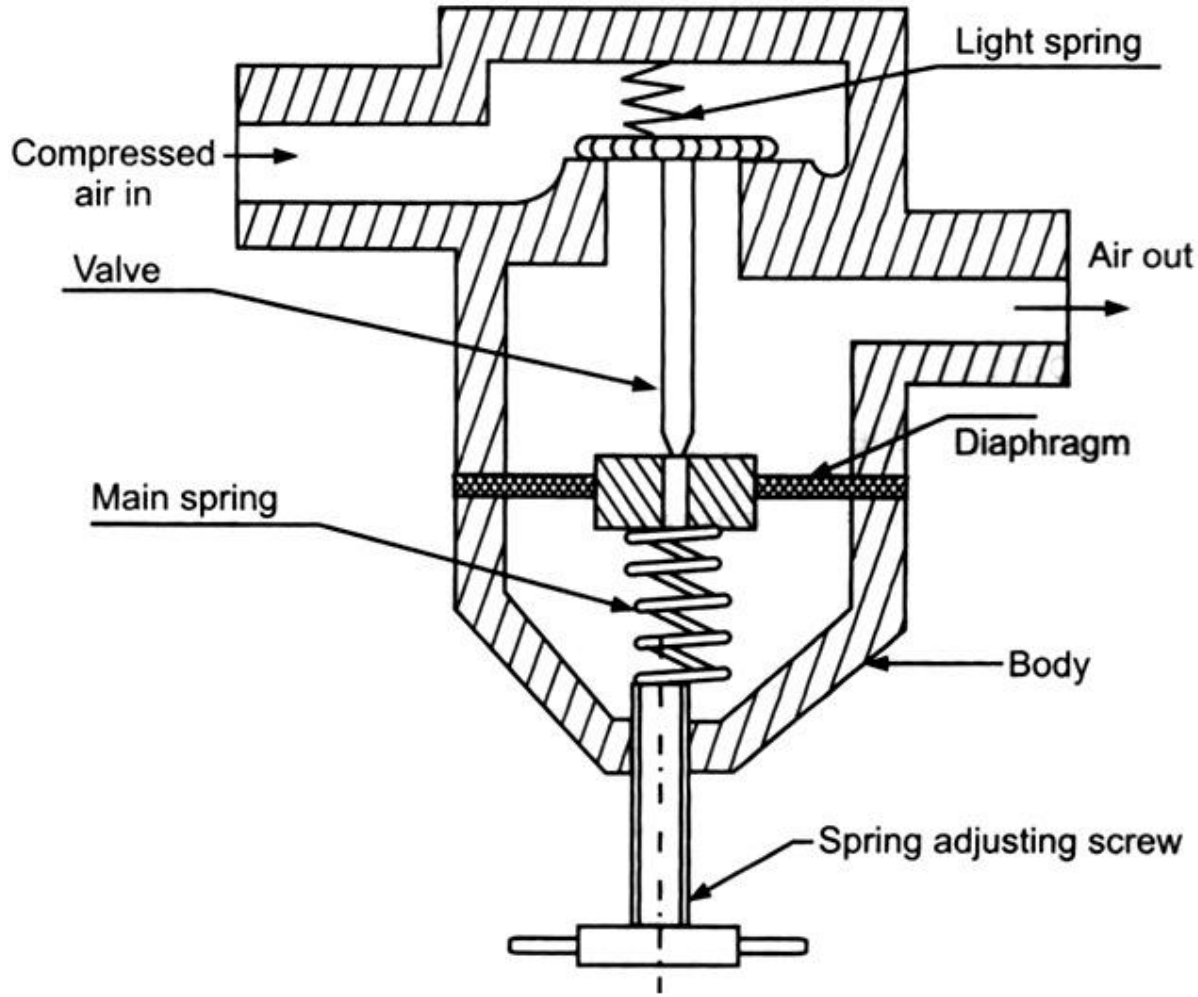

When light spring is compressed, pressure reduction is less.

If light spring compression is more, pressure reduction is more.

Basic Components of Pneumatic System

Compressed air lubricator

- The purpose of the lubricator is to deliver a metered quantity of oil mist into the air distribution system when necessary for the operation of the pneumatic system.

Basic Components of Pneumatic System

Venturi effect

The **velocity** of the air increases as the cross sectional area decreases.

The **pressure** of the air decreases as the cross sectional area increases.

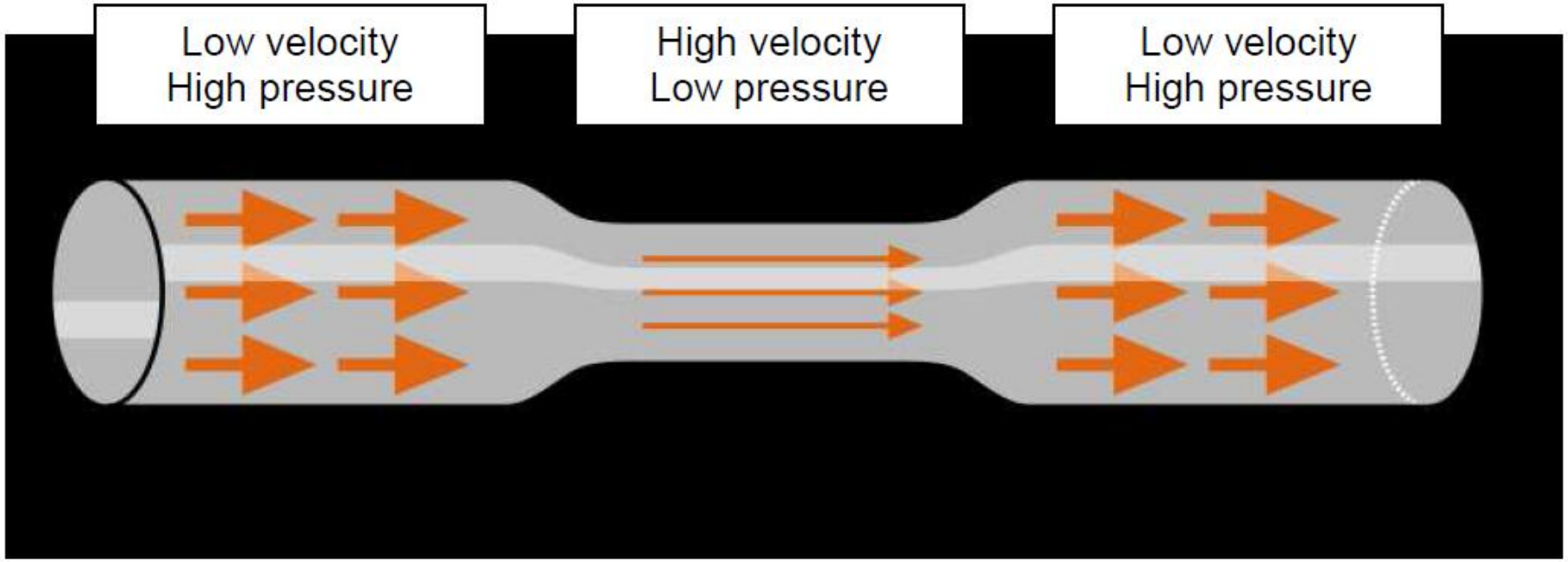

Basic Components of Pneumatic System

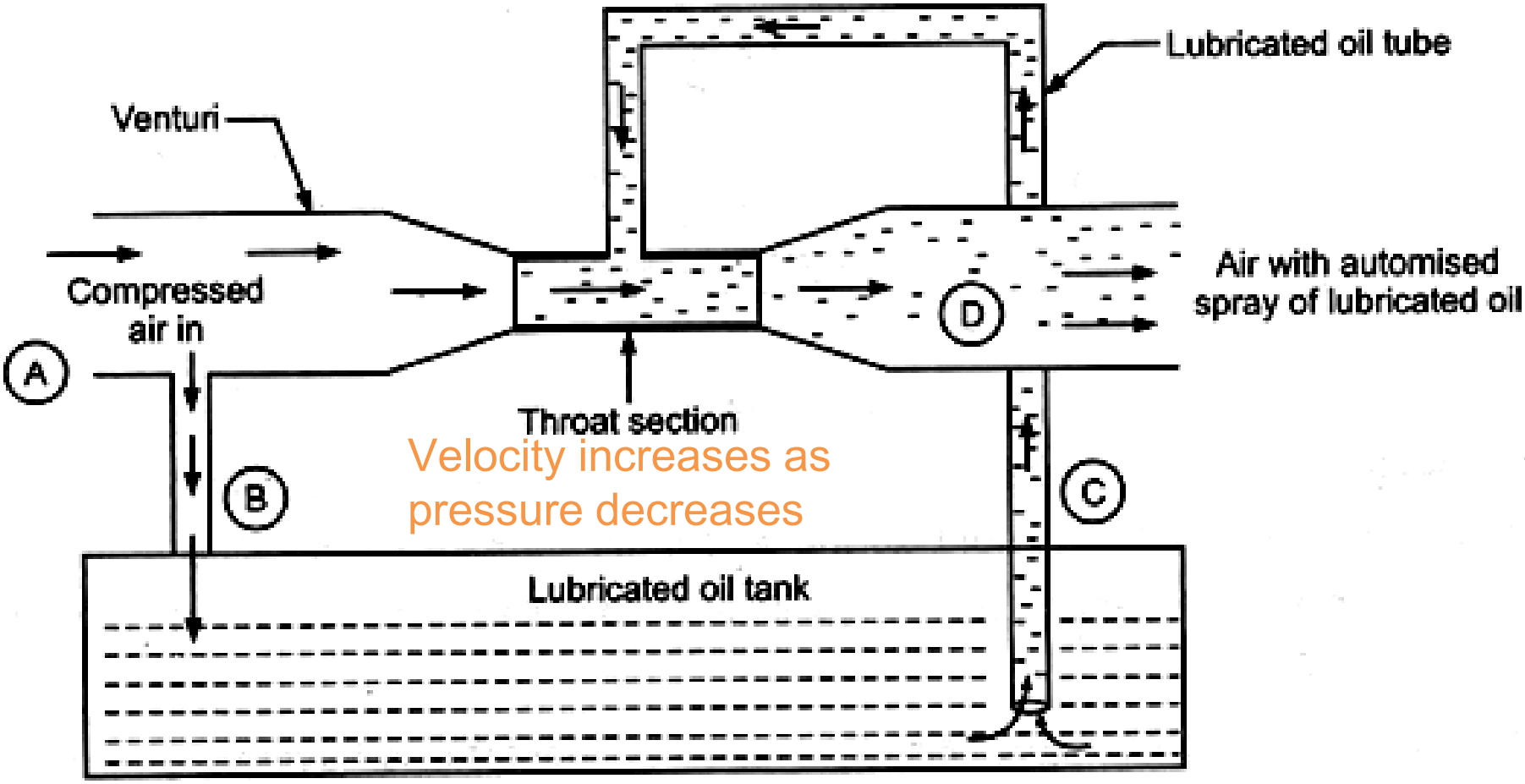

When compressed air passes through throat section its pressure reduces and lubricant enters in throat.

Basic Components of Pneumatic System

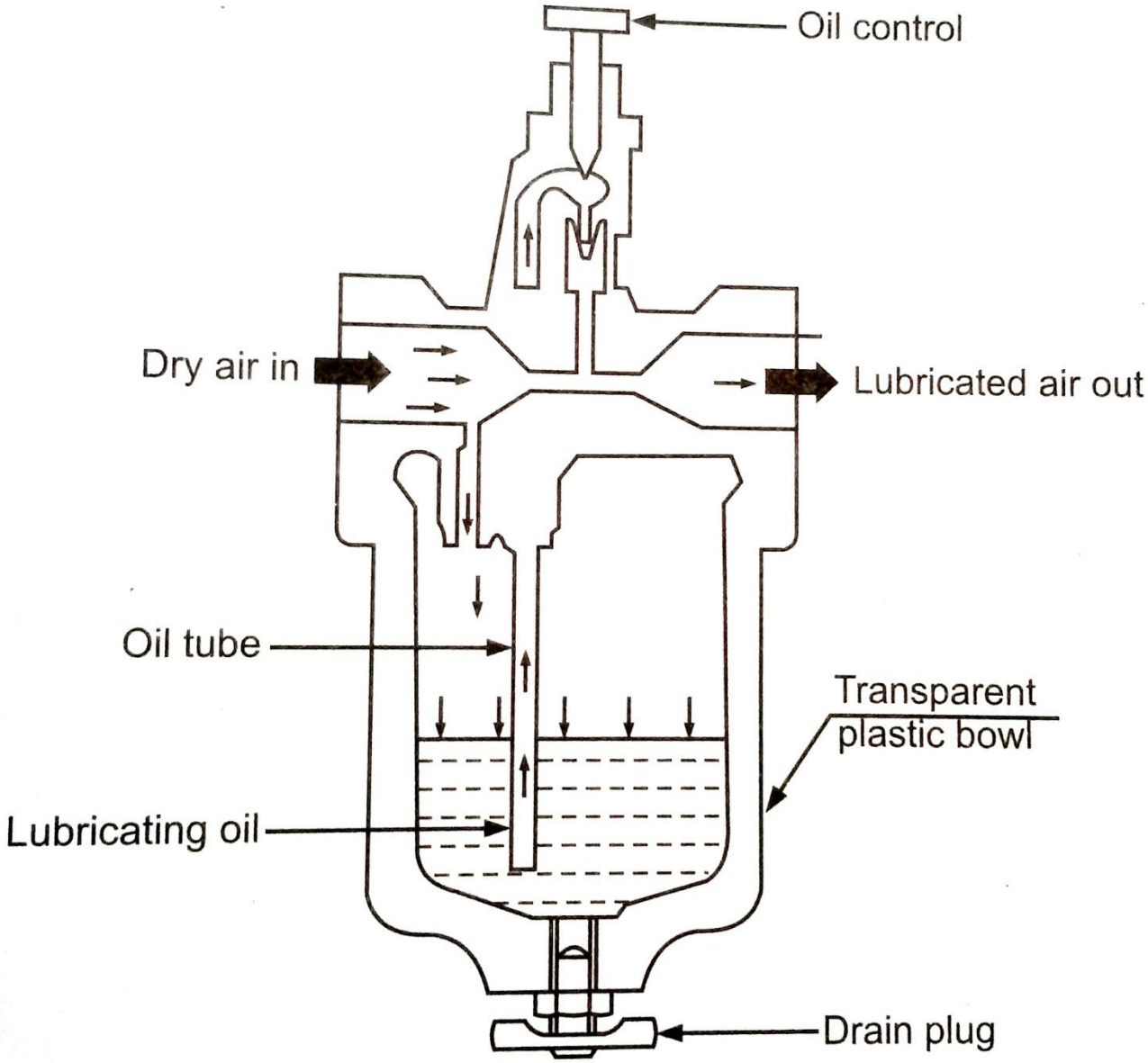

Basic Components of Pneumatic System

Basic Components of Pneumatic System

SYMBOL for Filter

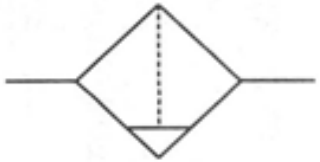

SYMBOL for Regulator

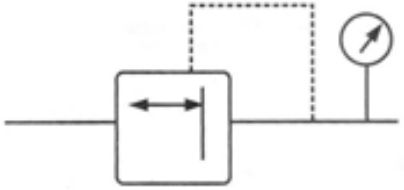

SYMBOL for Lubricator

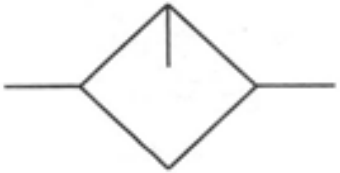

COMBINED SYMBOL for F R L

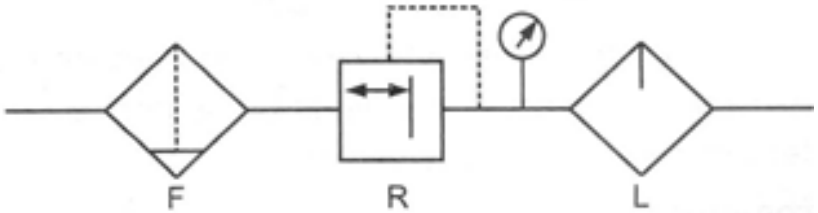

COMPOSITE SYMBOL used in pneumatic circuit

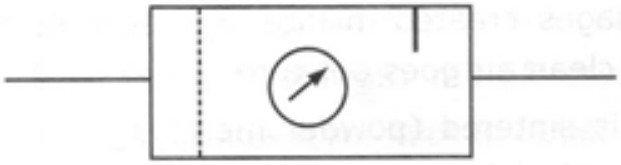

Basic Components of Pneumatic System

RED – Switching Position

YELLOW - Port

BLUE – Connecting port (lines

GREEN – Port Number

ORANGE – Closed port

ARROW – Direction of flow

BLACK – Actuation symbol

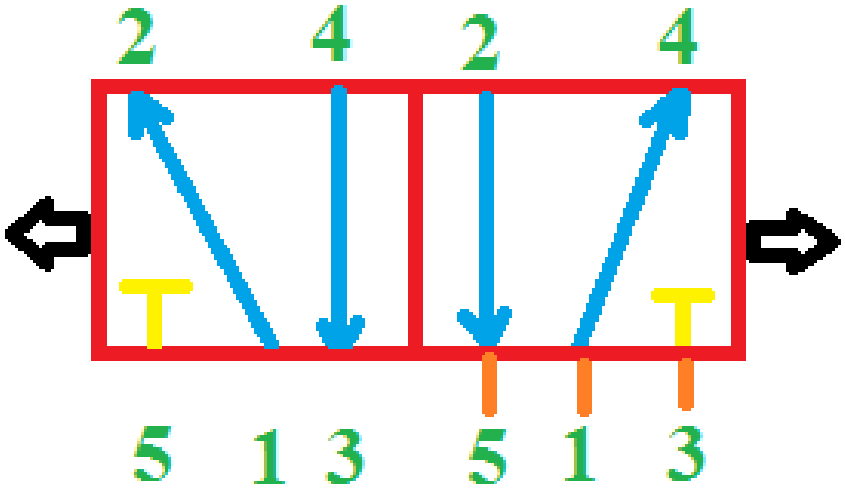

1	Pressure port
2, 4	Working port
3, 5	Exhaust port

Representation of a Direction control valve(DCV)

Basic Components of Pneumatic System

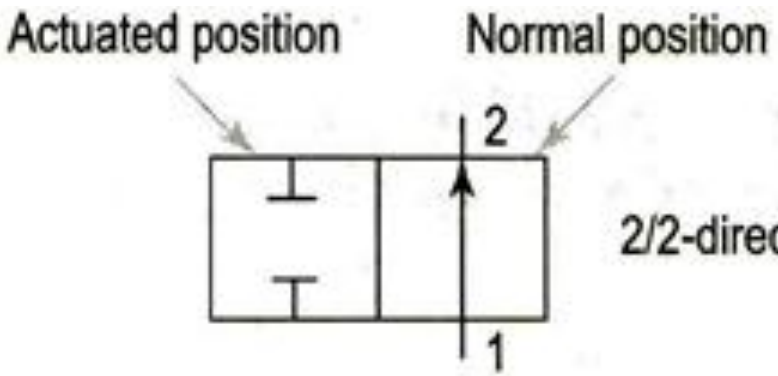

2/2-directional control valve

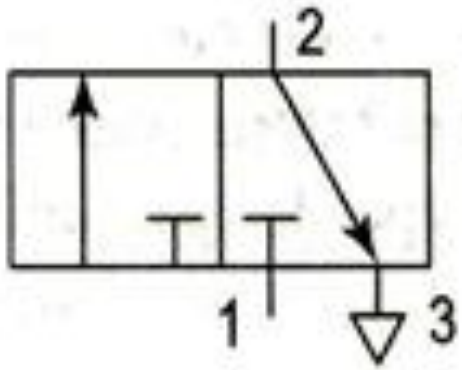

3/2-directional control valve (normally closed)

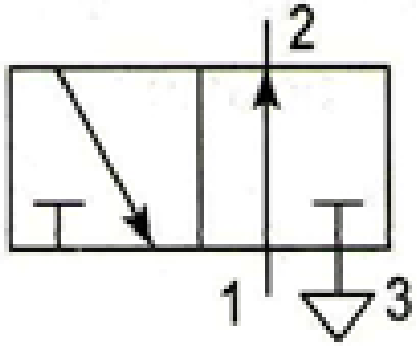

3/2-directional control valve (normally open)

Basic Components of Pneumatic System

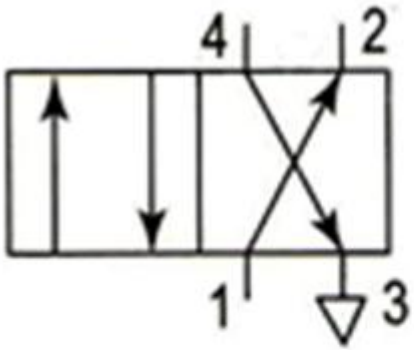

4/2-directional control valve

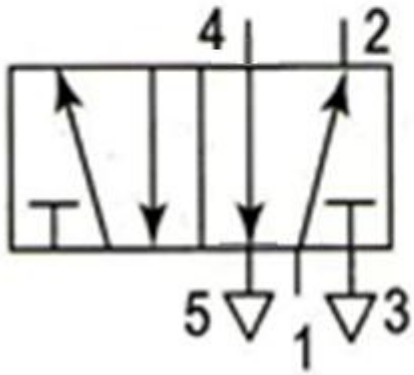

5/2-directional control valve

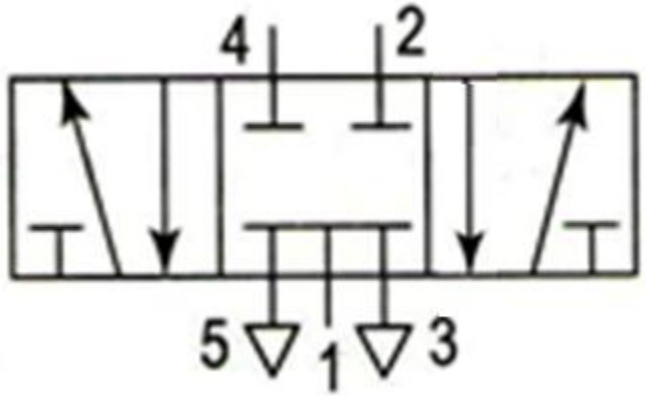

5/3-directional control valve
(mid position closed)

Basic Components of Pneumatic System

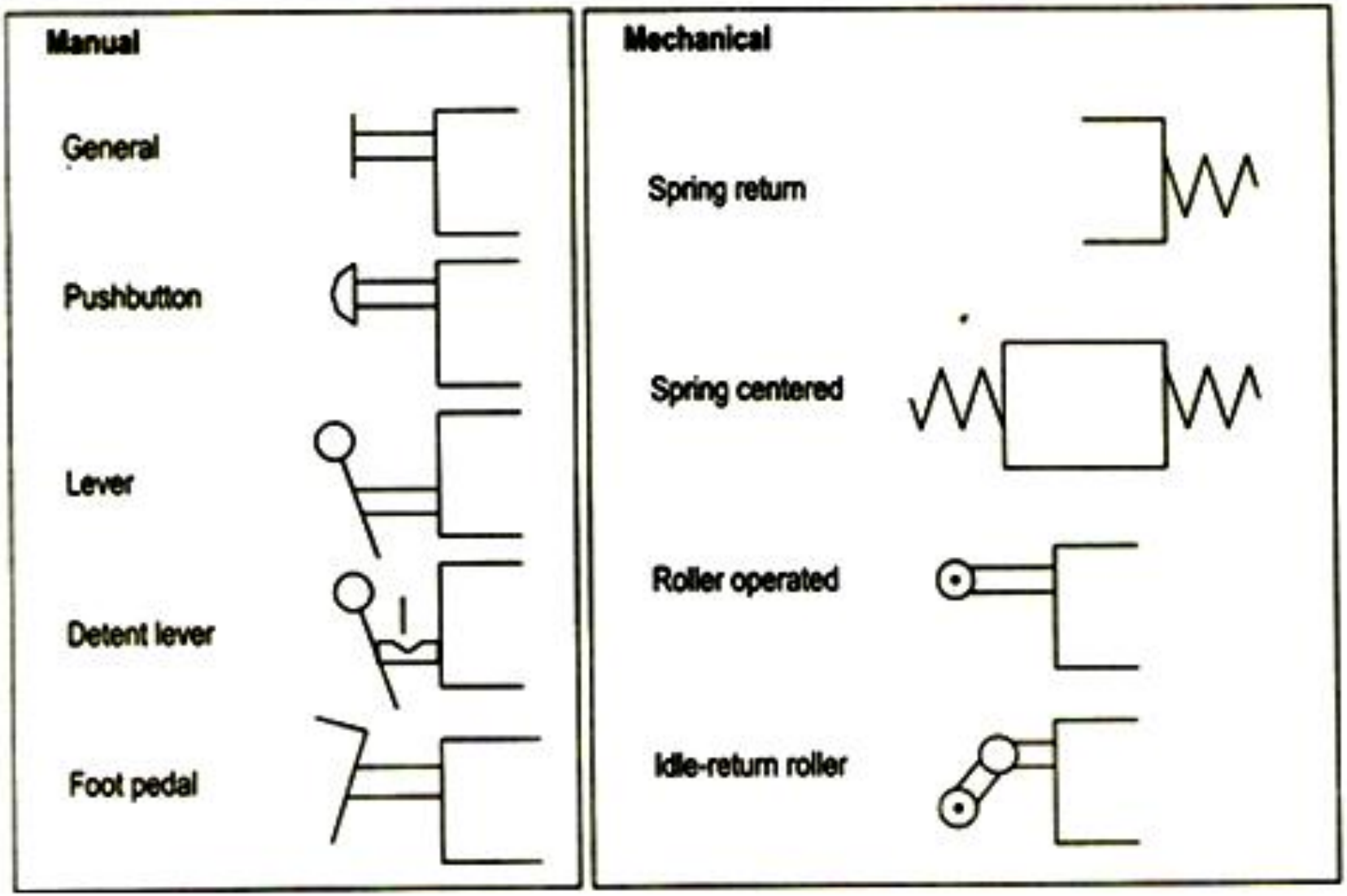

Basic Components of Pneumatic System

Pneumatic

Pneumatic, direct

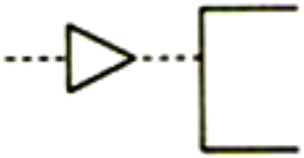

Pneumatic, indirect (or internal pilot)

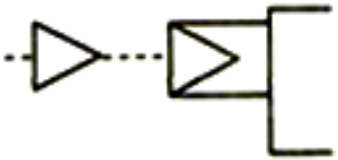

Electrical

Single solenoid

Double solenoid

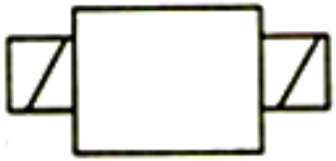

Combined

Double solenoid, internal pilot with manual override

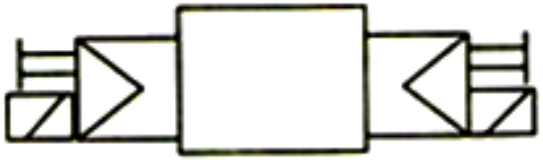

Basic Components of Pneumatic System

Three types of valves are employed in hydraulic systems:

1. Directional control valves

2. Flow control valves

3. Pressure control valves

Direction control valve

- Control the distribution of energy in a fluid power system.
- Provide the direction to the fluid.
- Control the start, stop and change in direction of the fluid flow.
- Contain ports that are external openings for the fluid.
- Number of ports is usually identified by the term ‘way’.
- For example, a valve with four ports is named as four-way valve.
- The fluid flow rate is responsible for the speed of actuator.

Direction control valve

DCV can be classified in the following manner:

1. Type of construction:

- Poppet valves
- Spool valves

2. Number of ports:

- Two- way valves
- Three – way valves
- Four- way valves.

Direction control valve

DCV can be classified in the following manner:

3. Number of switching position:

- Two – position
- Three - position

4. Actuating mechanism:

- Manual actuation
- Mechanical actuation
- Solenoid actuation
- Hydraulic actuation
- Pneumatic actuation
- Indirect actuation

Direction control valve

Poppet valve

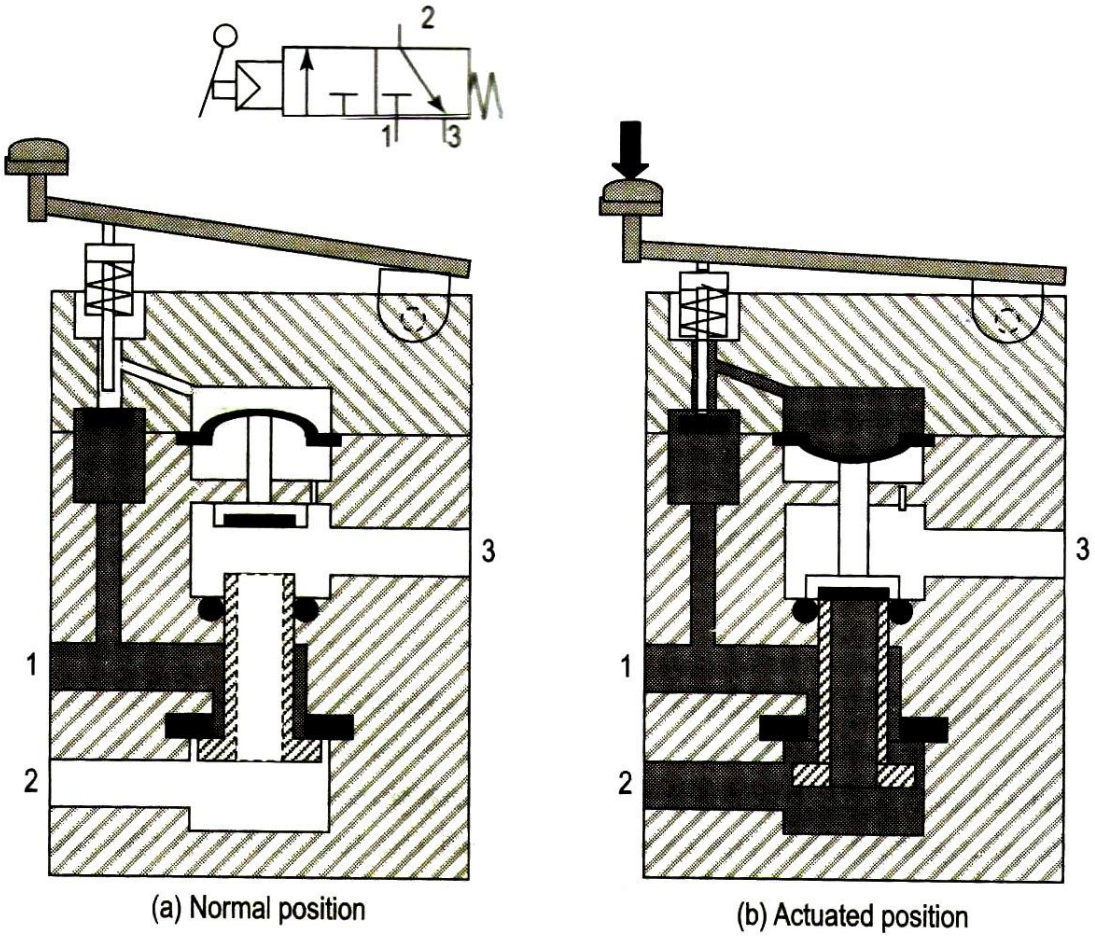

(a) Normal position (b) Actuated position

3/2 DC valve (NC) Disc poppet valve with internal pilot

Direction control valve

3/2-way roller lever valve, internal pilot, NC

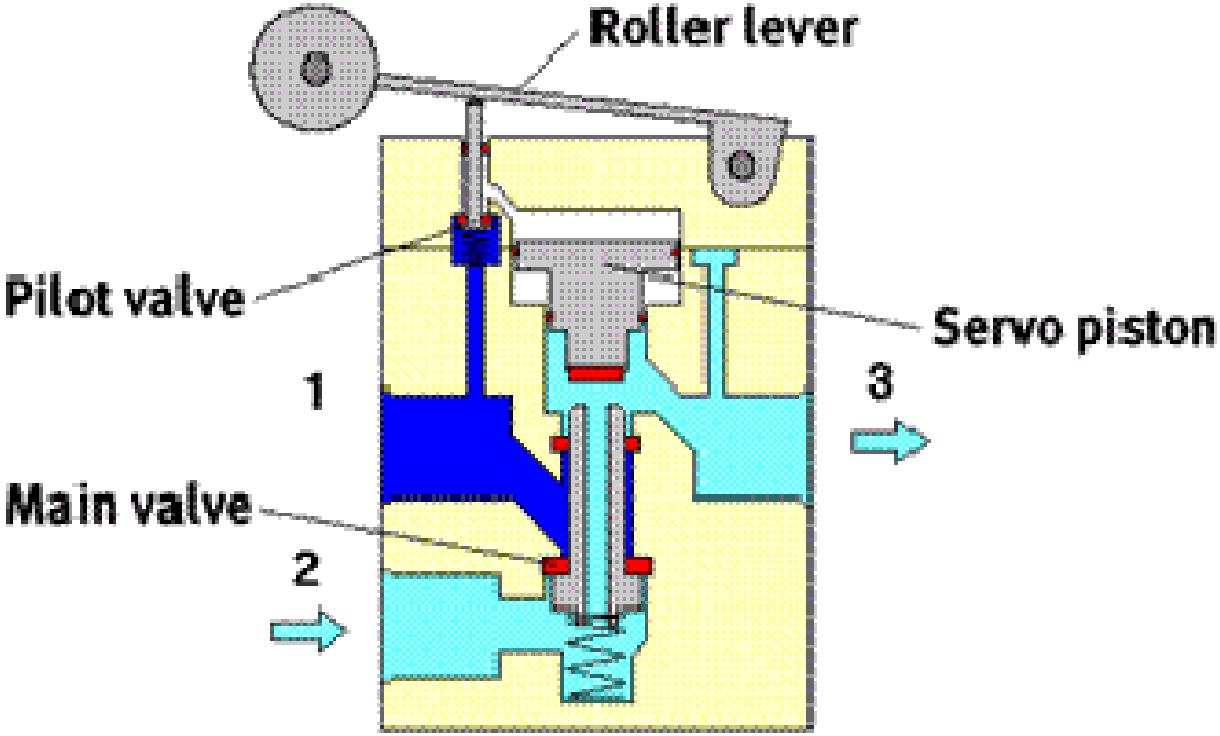

Direction control valve

3/2-way roller lever valve, internal pilot, NC

- A small hole connects the pressure connection (1) and the pilot valve.
- If the roller lever is operated, the pilot valve opens.
- Compressed air flows to the servo piston and actuates the main valve disc.
- First the connection from port (2) to port (3) is closed.
- Second the disc seat of the main valve opens, allowing the air to flow from pressure supply port (1) to working port (2). The air supply for the pilot valve is either internally connected to the supply port (1) or supplied through a separate port (mostly numbered 12 or 14).

Direction control valve

Spool valve

- Name is derived from their appearance.
- It consists of a shaft sliding in a bore.
- The spool is sealed along the clearance between moving spool and housing (valve body).
- The amount of leakage depends on:
    - the amount of clearance
    - viscosity of fluid
    - the level of the pressure.
- The grooves guide the fluid flow by interconnecting or blocking the holes (ports).

Direction control valve

Spool valve

- The spool valves are categorized according to:
    - number of operating positions
    - the way hydraulic lines interconnections.

- The standard terms are referred as
    - Port ‘P’ is pressure port,
    - Port ‘T’ is tank port
    - Port ‘A’ and Port ‘B’ as working ports.

- The actuators can move in forward or backward direction depending on the connectivity of the pressure and tank port with the actuators port.

Direction control valve

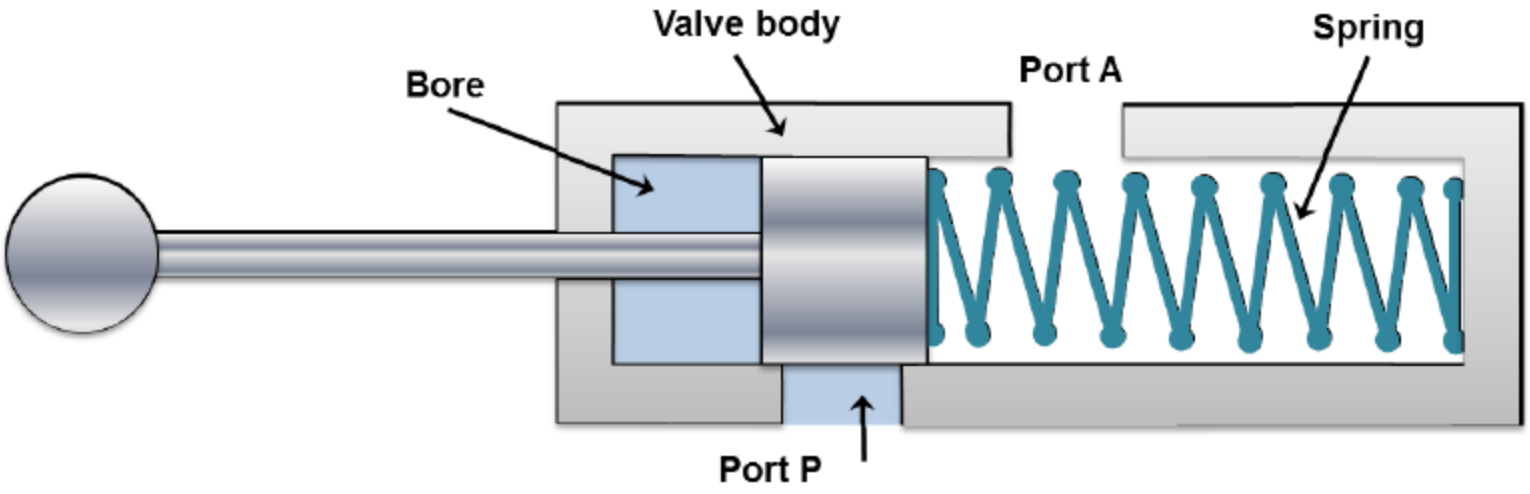

Valve closed

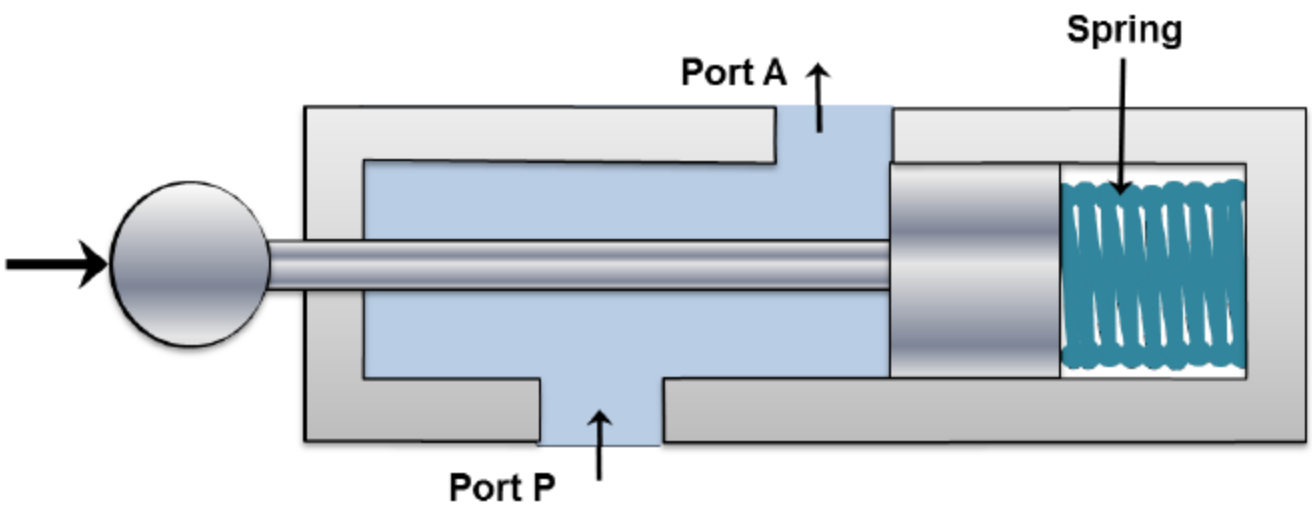

Direction control valve

2 Number of ports

Two way valves

- Have only two ports
- Also known as on-off valves because they allow the fluid flow only in direction.
- Normally, the valve is closed.
- Available as normally open and normally closed function.

Direction control valve

2 Number of ports

Two way valves

- When actuating force is not applied to the right, the port P is not connected with port A.
- Therefore, the actuation does not take place.

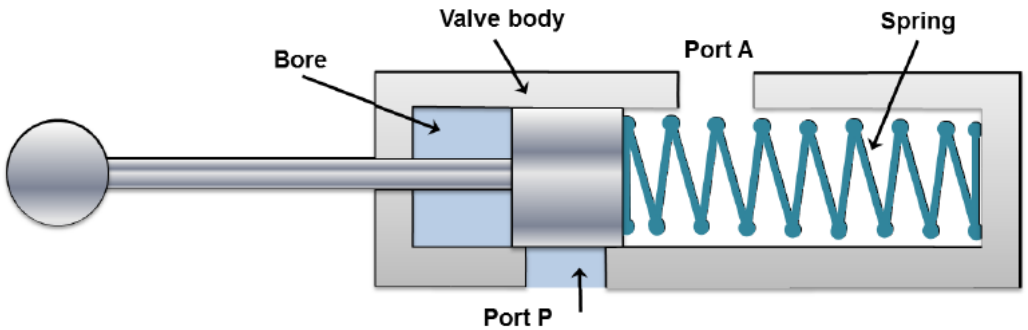

- In a two-way spool valve in the open condition, the pressure port P is connected with the actuator port A.

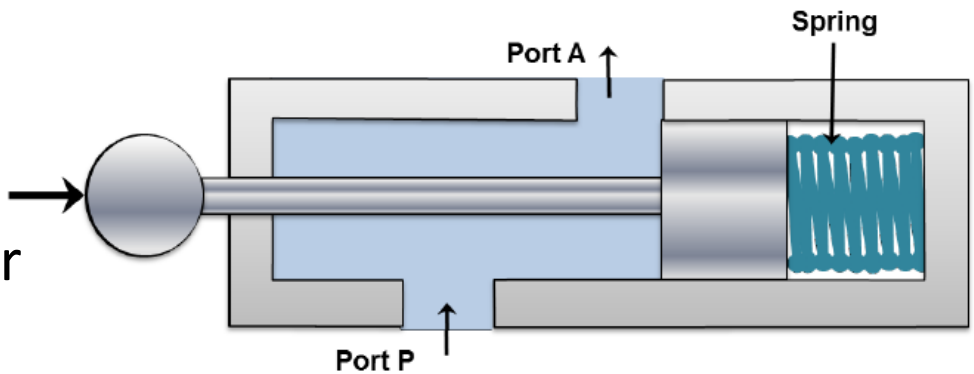

Direction control valve

2 Number of ports

Three way valves

- When a valve has one pressure port, one tank port and one working port
- In this valve, the pressure port pressurizes one port and exhausts another one.
- Only one actuator port is opened at a time.
- In some cases a neutral position is also available when both the ports are blocked.
- Generally, these valves are used to operate single acting cylinders.

Direction control valve

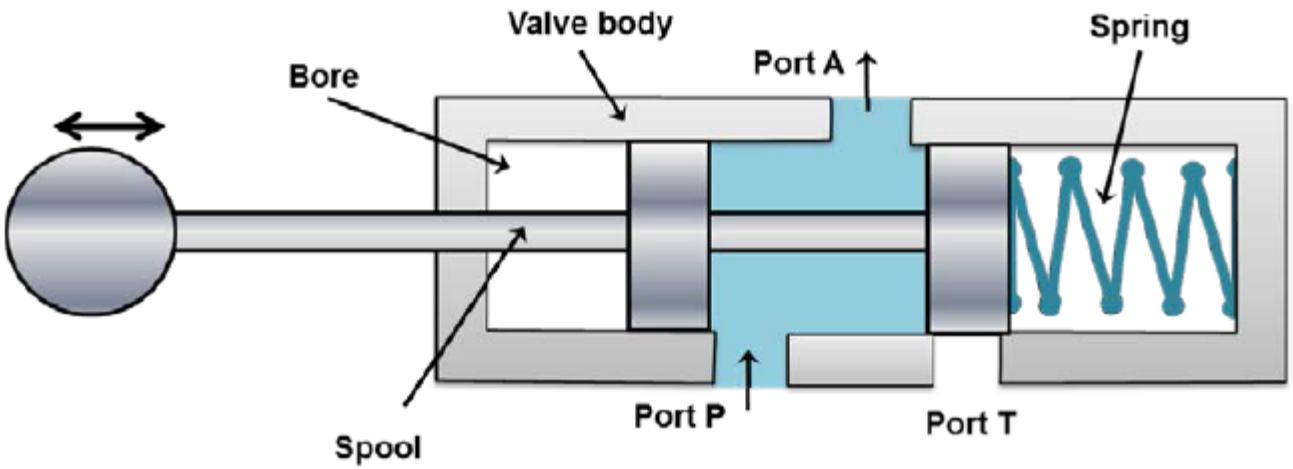

Three way valve: P to A connected and T is blocked

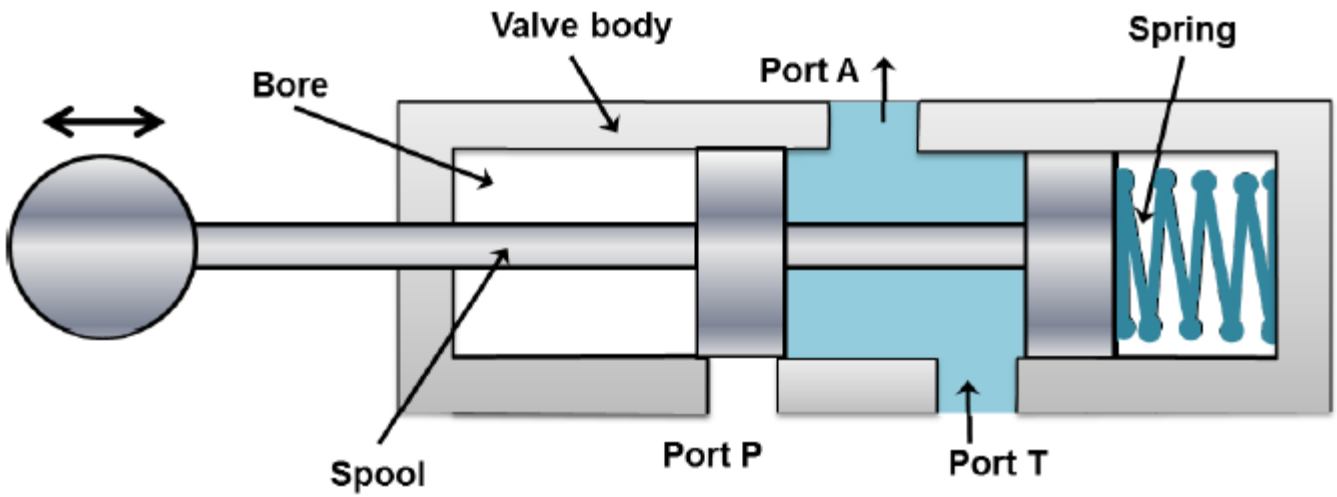

Three way valve in closed position

Direction control valve

Four way valves

- It is generally used to operate the cylinders and fluid motors in both the directions.
- The four ways are: pump port P, tank port T, and two working ports A and B connected to the actuator.
- The primary function of a four way valve is to pressurize and exhaust two working ports A and B alternatively.

Direction control valve

- When the centered path is actuated, port A and B are connected with both the ports P and T respectively.
- In this case, valve is not active because all the ports are open to each other.
- The fluid flows to the tank at atmospheric pressure.
- In this position work cannot be done by any part of the system.
- This configuration helps to prevent heat build up.

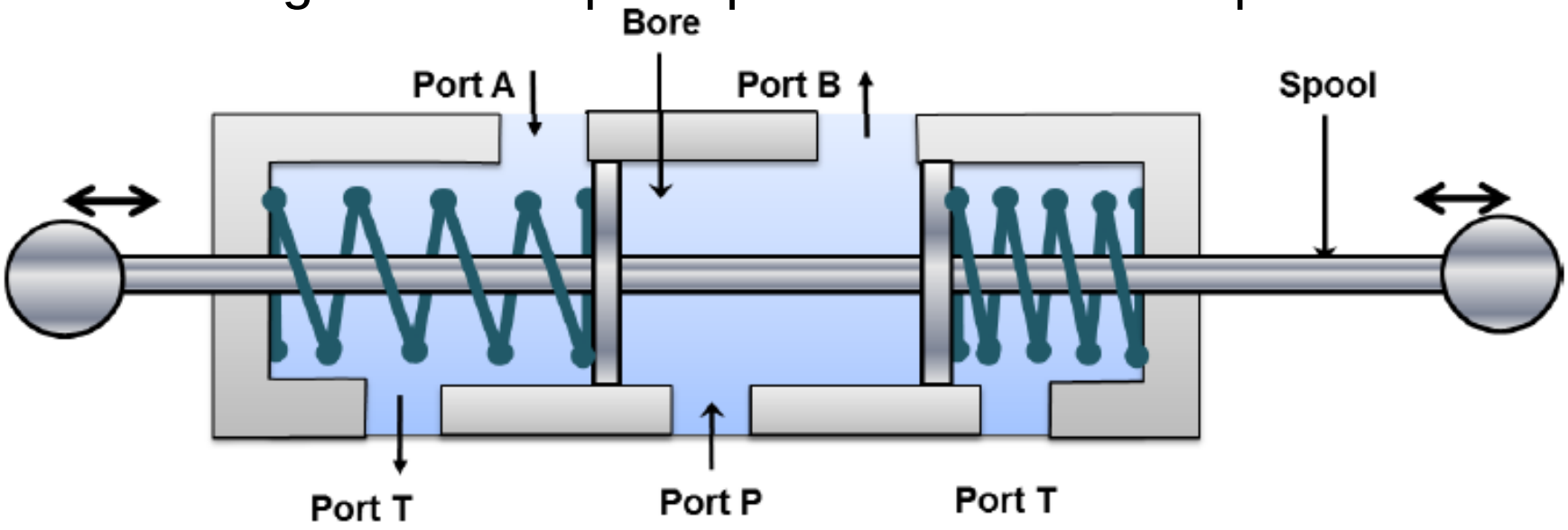

Three position four way valve: P to B and A to T

Direction control valve

- When port B is actuated, the port P is connected with ports B and T is connected with port A.
- Similarly, when the right end is actuated the port P is connected to A and working port B is connected to port T.

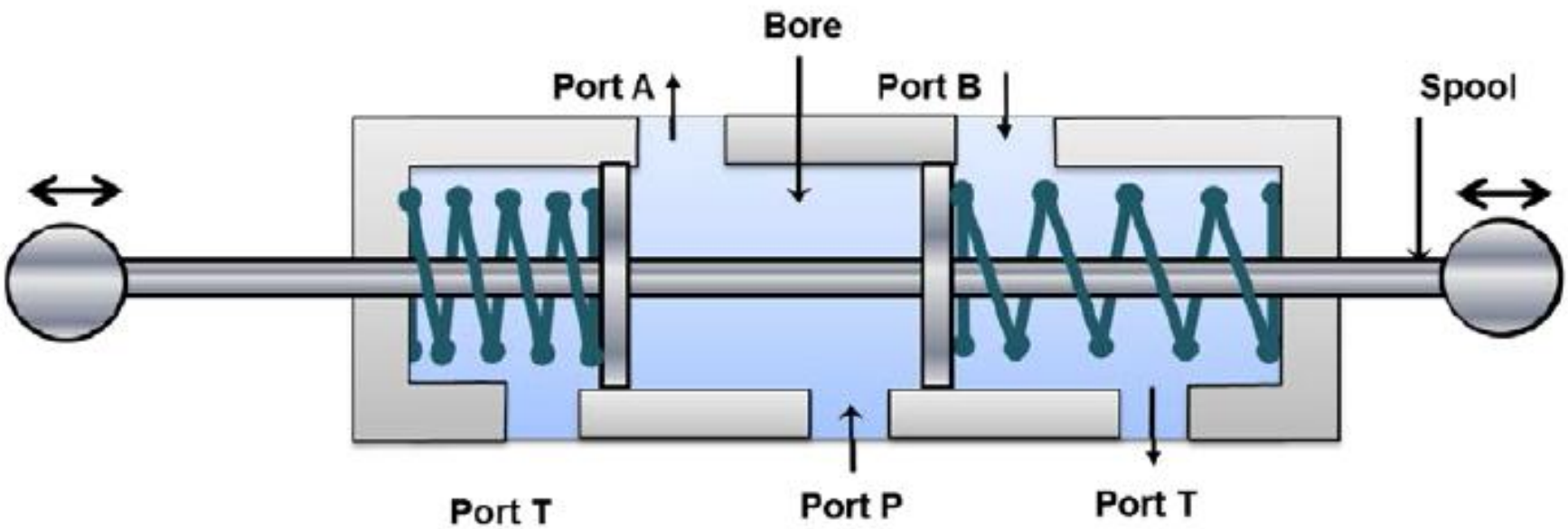

Three position four way valve: P to A and B to T

Direction control valve

- The three position valves are used when the actuator is needed to stop or hold at some intermediate position.
- It can also be used when the multiple circuits or functions are accomplished from one hydraulic power source.

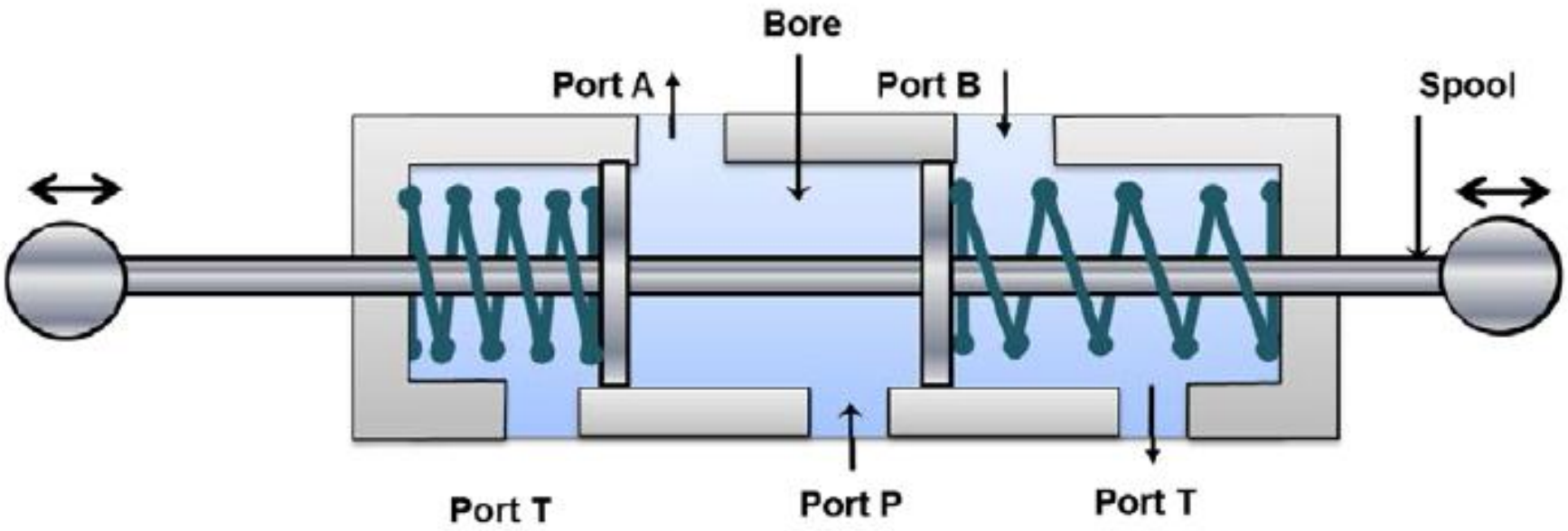

Three position four way valve: P to A and B to T

Direction control valve

According to number/ways of switching position

Three position valves

- Are used in double-acting cylinders
- Perform advance, hold and return operation to the piston.
- Have three switching positions.
- They have a variety of possible flow path configurations but have identical flow path configuration.

Direction control valve

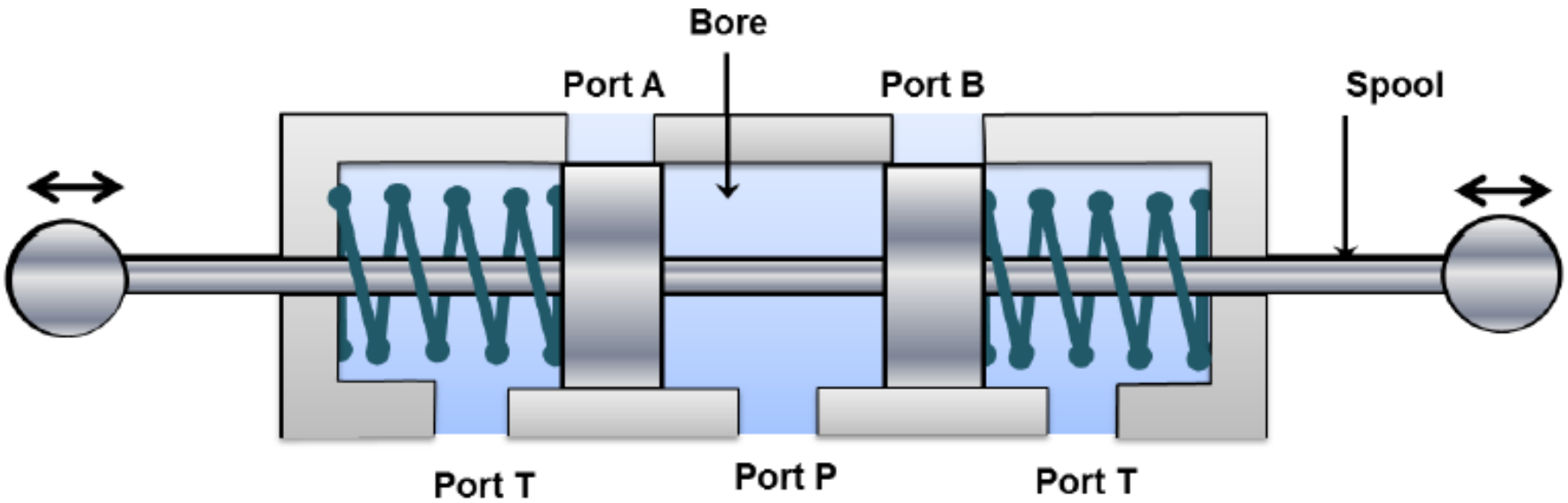

Three position four way valve: closed center

Direction control valve

2. Classification based on actuation mechanism

2.1 Manual actuation

- In this type, the spool is operated manually.
- Manual actuators are hand lever, push button and pedals etc.

Direction control valve

2.2 Mechanical actuation

- The DCV spool can be operated by using mechanical elements.
- Roller and cam, roller and plunger and rack and pinion etc.
- Here the spool end is of roller or a pinion gear type.
- The plunger or cam or rack gear is attached to the actuator.
- Thus, the mechanical elements gain some motion relative to the actuator (cylinder piston) which can be used for the actuation.

Direction control valve

2.3 Solenoid actuation

- The solenoid actuation is also known as electrical actuation.
- The energized solenoid coil creates a magnetic force which pulls the armature into the coil.
- This movement of armature controls the spool position.
- The main advantage of solenoid actuation is its less switching time.

Direction control valve

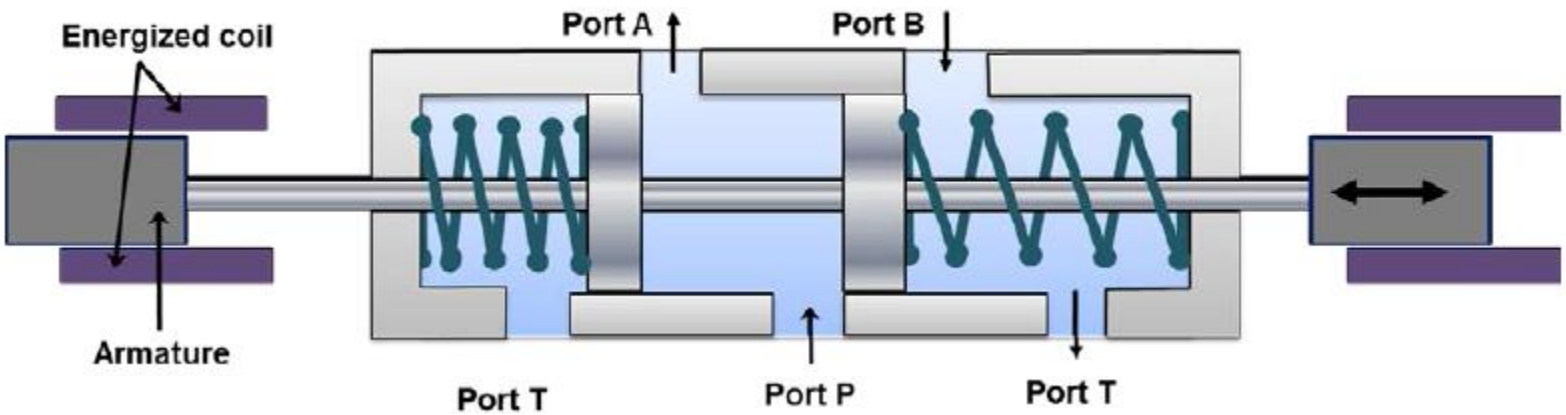

Solenoid actuation

Direction control valve

2.4 Hydraulic actuation

- This type actuation is usually known as pilot-actuated valve.
- The hydraulic pressure is directly applied on the spool.
- The pilot port is located on one end of the valve.
- Fluid entering from pilot port operates against the piston and forces the spool to move forward.
- The needle valve is used to control the speed of the actuation.

Direction control valve

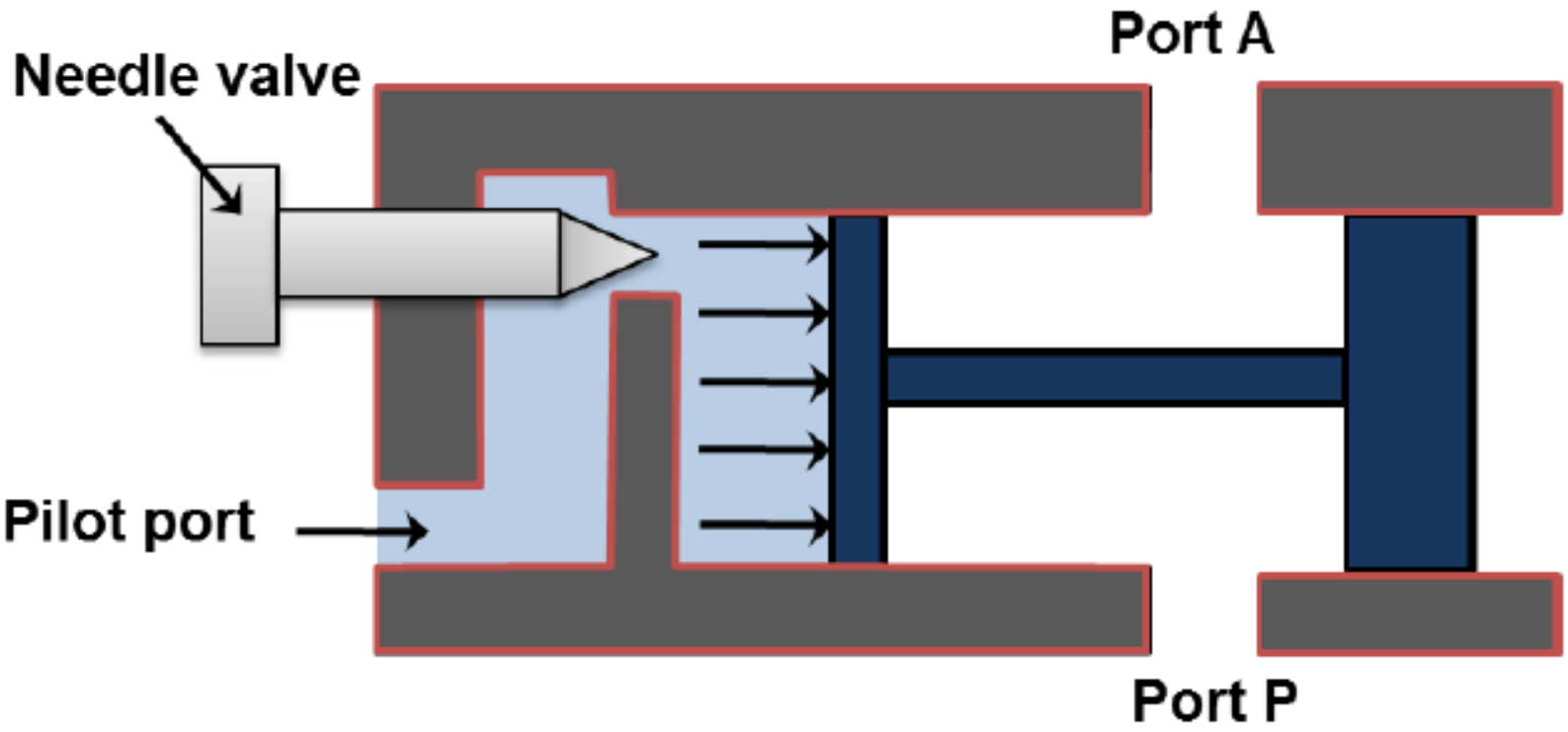

Direction control valve

2.5 Pneumatic actuation

- DCV can also be operated by applying compressed air against a piston at either end of the valve spool.
- The construction of the system is similar to the hydraulic actuation.
- The only difference would be the actuation medium.
- The actuation medium is the compressed air in pneumatic actuation system.

Direction control valve

2.6 Indirect actuation of directional control valve

- The direction control valve can be operated by manual, mechanical, solenoidal (electrical), hydraulic (pilot) and pneumatic actuations.
- The mode of actuation does not have any influence on the basic operation of the hydraulic circuits.
- Mostly, the direct actuation is restricted to use with smaller valves only because usually lot of force is not available.
- The availability of limited force is the greatest disadvantage of the direct actuation systems.

Direction control valve

2.6 Indirect actuation of directional control valve

- In practice, the force required to shift the spool is quiet higher.
- Therefore, the larger valves are often indirectly actuated in sequence.
- First, the smaller valve is actuated directly and the flow from the smaller valve is directed to either side of the larger valve.
- The control fluid can be supplied by the same circuit or by a separate circuit.
- The pilot valve pressure is usually supplied internally.
- These two valves are often incorporated as a single unit.

Flow control valve

- Speed of actuator needs to be controlled for desired o/p.
- Actuator speed can be controlled by regulating fluid flow.
- FCV can regulate flow or pressure of fluid.
- Fluid flow is controlled by varying area of the valve opening through which fluid passes.
- Fluid flow can be decreased by reducing the area of the valve opening and it can be increased by increasing the area of the valve opening.
- Example to the fluid flow control valve is the tap.
- The pressure adjustment screw varies the fluid flow area in the pipe to control the discharge rate.

Flow control valve

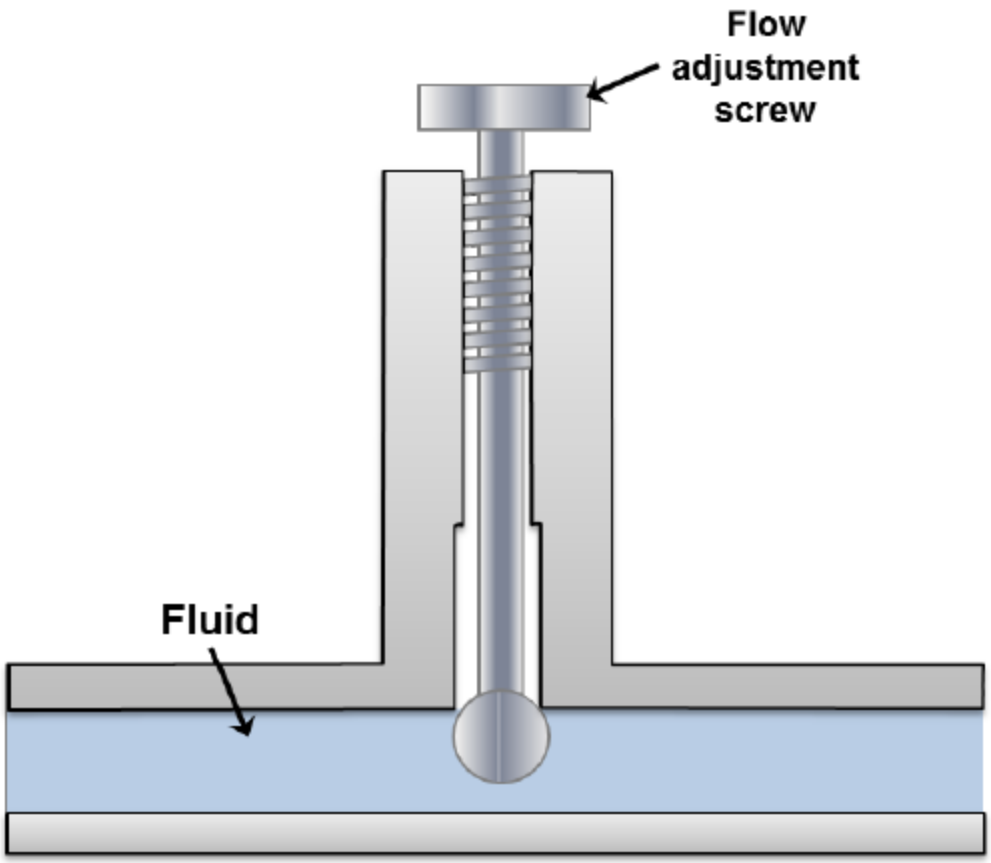

Flow Control Valve

Flow control valve

Types Flow Control Valves

- The flow control valves work on applying a variable restriction in the flow path.
- Based on the construction; there are mainly four types

Plug valve
Butterfly valve
Ball valve

Flow control valve

Plug or glove valve

- It has a plug which can be adjusted in vertical direction by setting flow adjustment screw.
- Adjustment of plug alters orifice size between plug and valve seat.
- Thus adjustment of plug controls fluid flow in the pipeline.
- The characteristics of these valves can be accurately predetermined by machining the taper of the plug.
- The typical example of plug valve is stopcock that is used in laboratory glassware.

Flow control valve

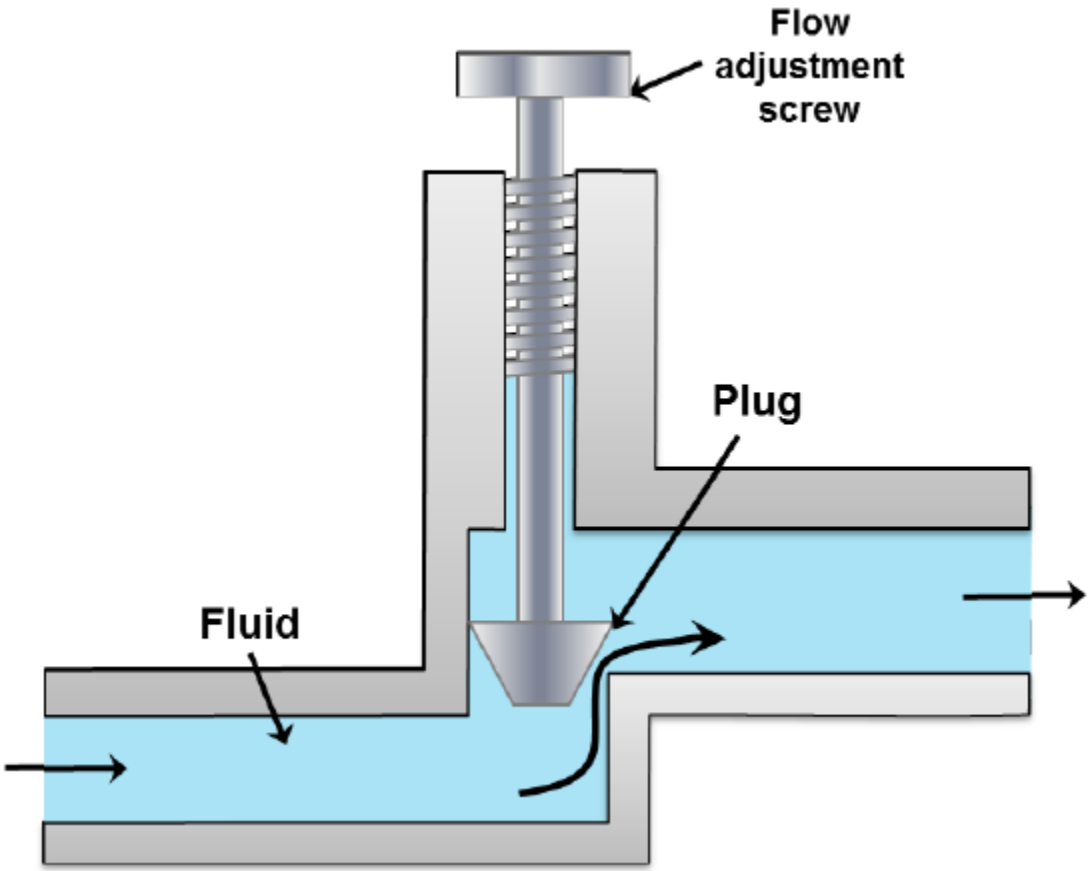

Plug or glove valve

Flow control valve

Butterfly valve

- It consists of a disc which can rotate inside the pipe.
- The angle of disc determines the restriction.
- Butterfly valve can be made to any size and is widely used to control the flow of gas.
- Butterfly valves are favoured because of their lower cost and lighter weight.
- The disc is always present in the flow therefore a pressure drop is induced regardless of the valve position.

Flow control valve

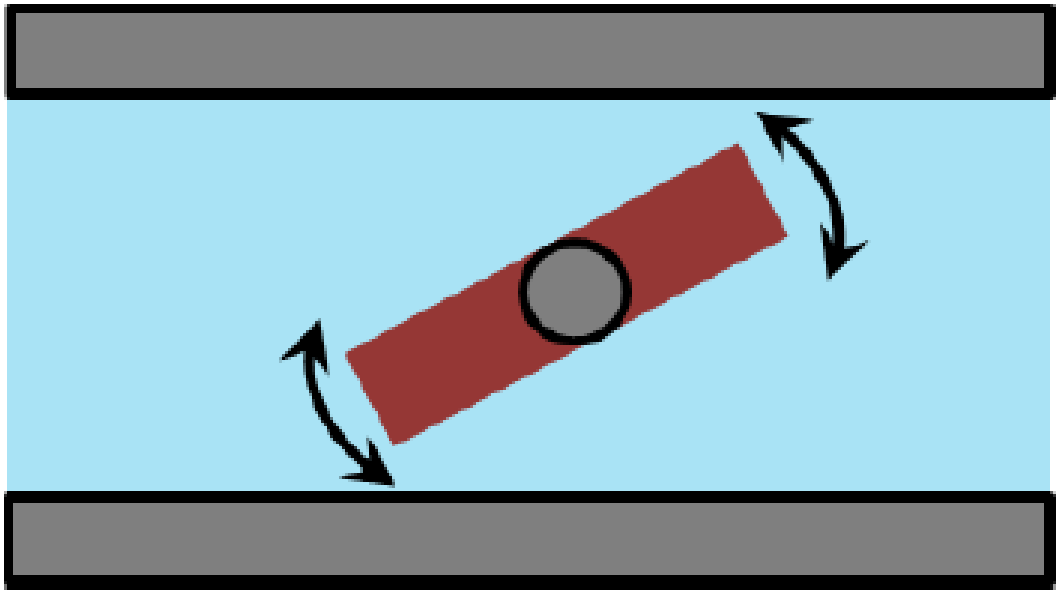

Butterfly valve

Flow control valve

Ball Valve

- It valve uses a ball rotated inside a machined seat.
- The ball has a through hole as shown in figure.
- It has very less leakage in its shut-off condition.
- Ball valves are durable and work for many years.
- They are excellent choice for shutoff applications.
- They do not offer fine control which may be necessary in throttling applications.
- These valves are widely used in industries because of their versatility, high supporting pressures (up to 1000 bar) and temperatures (up to 250°C).
- They are easy to repair and operate.

Flow control valve

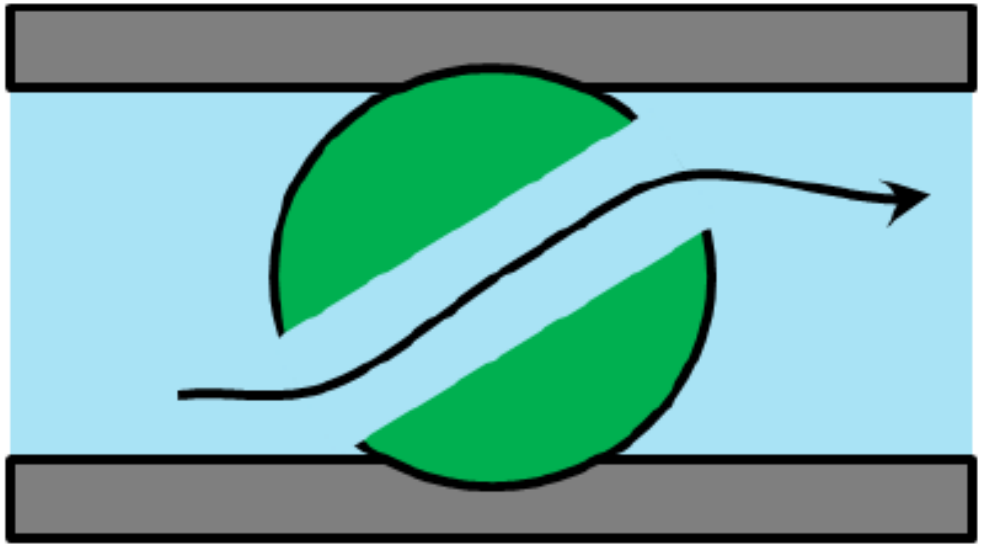

Ball Valve

Pressure relief valve

- They are used to protect the hydraulic components from excessive pressure.
- This is required for safe operation of the system.
- Its primary function is to limit the system pressure within a specified range.
- It is normally a closed type
- Valve opens when the pressure exceeds a specified maximum value by diverting pump flow back to the tank.
- Simplest valve contains a poppet held in a seat against the spring force.

Pressure relief valve

- The fluid enters from the opposite side of the poppet.
- When the system pressure exceeds the preset value, the poppet lifts and the fluid is escaped through the orifice to the storage tank directly.
- It reduces the system pressure and as the pressure reduces to the set limit again the valve closes.
- This valve does not provide a flat cut-off pressure limit with flow rate because the spring must be deflected more when the flow rate is higher.

Pressure relief valve

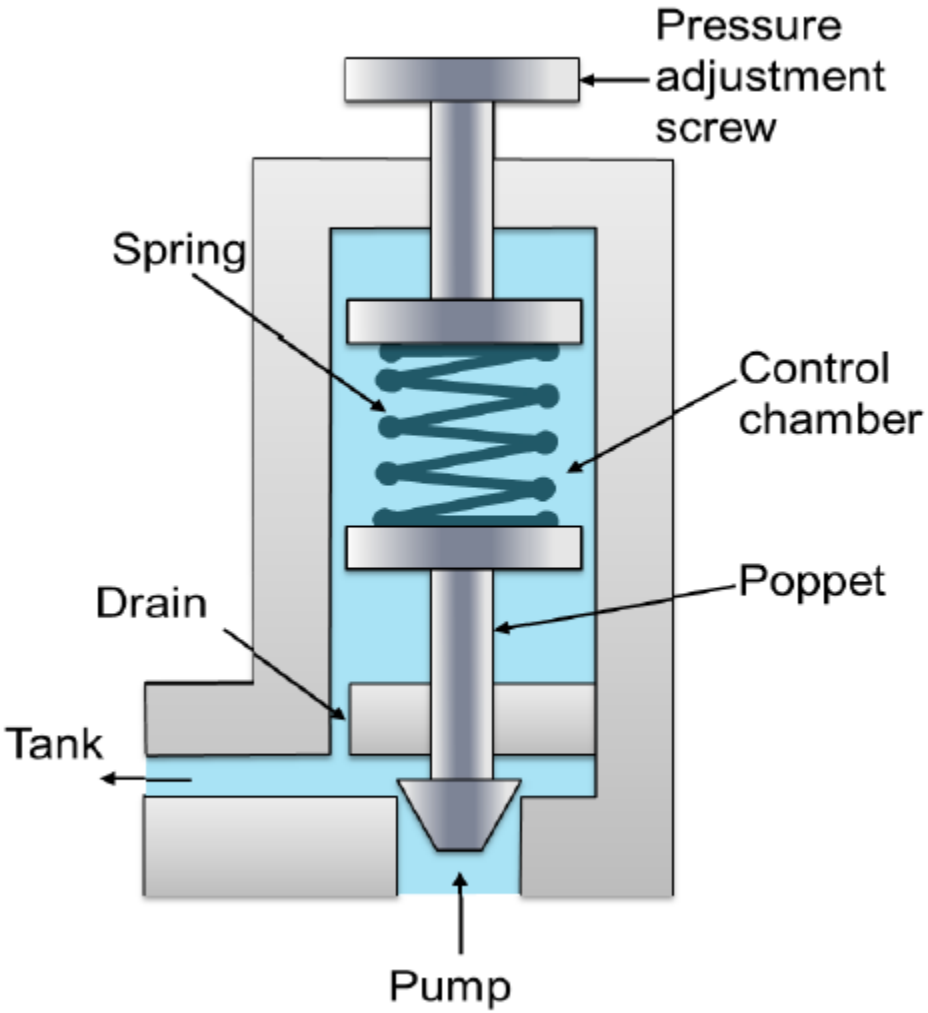

Compressor:

- It is a mechanical device which converts mechanical energy into fluid energy.
- The compressor increases the air pressure by reducing its volume which also increases the temperature of the compressed air.
- The compressor is selected based on the pressure it needs to operate and the delivery volume.

Piston compressors

- The simplest form is single cylinder compressor.
- It produces one pulse of air per piston stroke.
- As the piston moves down during the inlet stroke the inlet valve opens and air is drawn into the cylinder.
- As the piston moves up the inlet valve closes and the exhaust valve opens which allows the air to be expelled.

Piston compressors

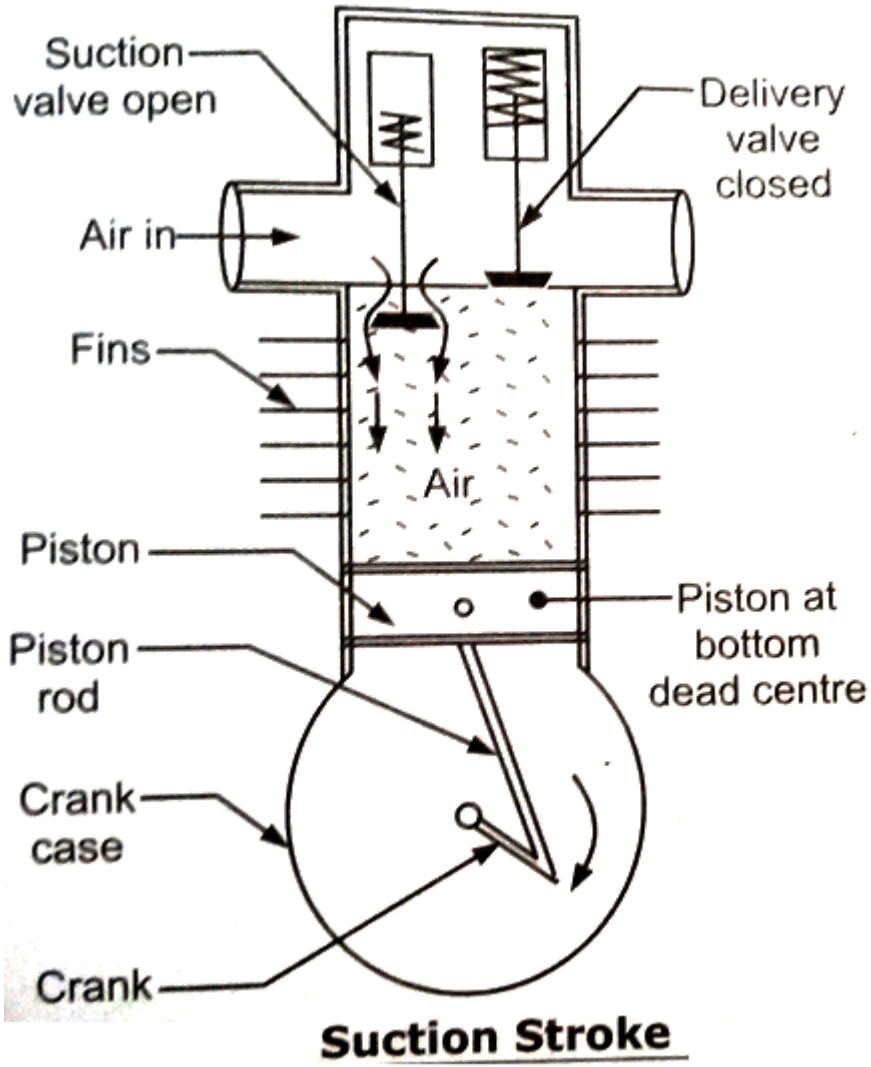

Suction Stroke

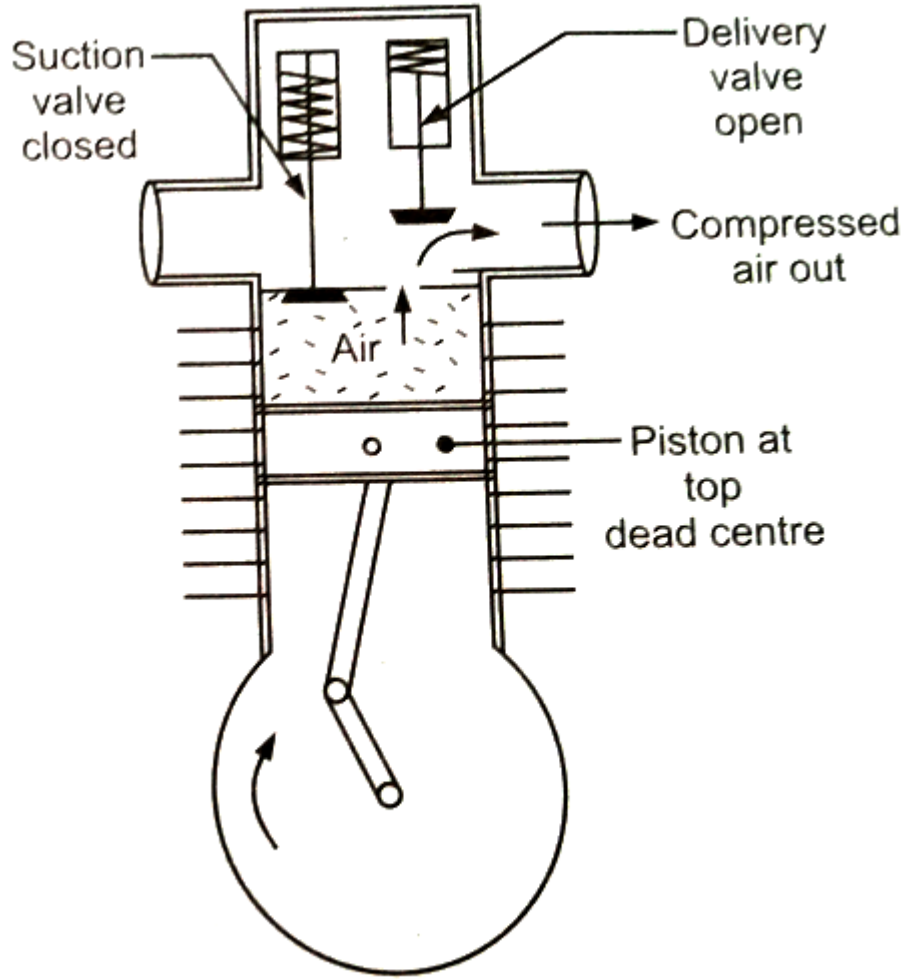

Delivery Stroke

Pneumatic components are designed for a maximum operating pressure of 8 - 10 bar.

In practice it operate between 5 and 6 bar for economic use.

Due to the pressure losses in the distribution system the compressor should deliver between 6.5 and 7 bar to attain these figures.

Selection of pipe diameter in Pneumatics

- The selection of pipe diameter of the air distribution system is governed by:
    - Flow rate
    - Line length
    - Permissible pressure loss
    - Operating pressure
    - Number of flow control points in the line

APPLICATIONS OF HYDRAULIC SYSTEMS

Mainly used for precise control of larger forces.

Industrial:

Plastic processing machineries, steel making and primary metal extraction applications, automated production lines, machine tool industries, paper industries, textile machineries, R & D equipment and robotic systems etc.

Mobile hydraulics:

Tractors, irrigation system, earthmoving equipment, material handling equipment, commercial vehicles, tunnel boring equipment, rail equipment, building and construction machineries and drilling rigs etc.

APPLICATIONS OF HYDRAULIC SYSTEMS

Automobiles:

It is used in the systems like breaks, shock absorbers, steering system, wind shield, lift and cleaning etc.

Marine applications:

It mostly covers ocean going vessels, fishing boats and navel equipment.

Aerospace equipment:

There are equipment and systems used for raddar control, flight control and transmission etc. which are used in airplanes, rockets and spaceships.